THE CIRKS RESIDENCE
3542 VENTURE DRIVE
HUNTINGTON BEACH, CA
RESIDENCE REMODEL AND ADDITION

VICINITY MAP

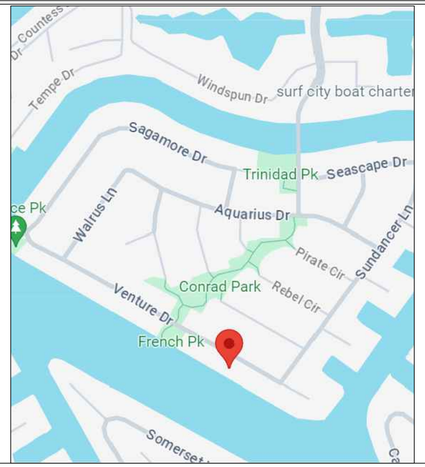

ZONING CONFORMANCE MATRIX

SUBJECT	CODE SECTION	REQUIRED	PROPOSED
LOT SIZE LOT WIDTH	210.06 210.06	6,000 S.F. 60'-0"	6,000 S.F. 60'-0"
MIN. FRONT S.B. MIN. SIDE S.B. MIN. REAR S.B. MIN. GARAGE S.B.	210.06 210.06 210.06 210.06	15'-0" 5'-0" 10'-0" 20'-0"	25'-8" 5'-0" 10'-8" 25'-8"
MAXIMUM HEIGHT	210.06	35'-0"	27'-7"
LOT COVERAGE	210.06	50%	49.8%
LANDSCAPE COV. (FRONT YARD)	210.06	40%	50.2%

HUNTINGTON BEACH SECURITY ORDINANCE

1. SLIDING GLASS DOORS AND WINDOWS LOCATED LESS THAN 16 FEET ABOVE ANY SURFACE AVAILABLE FOR USE BY THE PUBLIC SHALL BE CAPABLE OF BEING LOCKED SECURELY. MOVEABLE PANELS SHALL NOT BE EASILY REMOVED FROM THE FRAME.

2. ALL MAIN OR FRONT ENTRY TO DWELLINGS SHALL BE ARANGED SO THAT THE OCCUPANT HAS A VIEW OF THE AREA IMMEDIATELY OUTSIDE WITHOUT OPENING DOOR. SUCH VIEW MAY BE PROVIDED BY A DOOR VIEW, A VIEW PORT, WINDOW OR OTHER OPENING.

3. EXTERIOR WOODEN DOORS SHALL BE OF SOLID CORE CONSTRUCTION OR SHALL BE COVERED ON THE INSIDE FACE WITH 16 GUAGE SHEET METAL ATTACHED WITH SCREWS AT 6 INCH ON CENTERS AROUND THE PERIMETER.

4. ALL SWINGING DOORS SHALL BE EQUIPPED WITH A DEAD BOLT WITH A MINIMUM THROW OF 1" AND AN EMBEDMENT OF NOT LESS THAN 5/8".

5. THE INACTIVE LEAF OF A PAIR OF DOORS AND THE UPPER LEAF OF DUTCH DOORS SHALL BE EQUIPPED WITH A DEAD BOLT.

6. NON-REMOVABLE PINS SHALL BE USED INPIN TYPE HINGES WHICH ARE ACCESSIBLE FROM THE OUTSIDE WHEN THE DOOR IS CLOSED.

7. UNFRAMED GLASS DOORS SHALL BE FULLY TEMPERED GLASS NOT LESS THAN 1/2" THICK.

8. NARROW-FRAMED GLASS DOORS SHALL BE FULLY TEMPERED GLASS NOT LESS THAN 1/4" THICK.

9. ANY GLASS WHICH IS LOCATED WITHIN 40" OF THE LOCKING DEVICE ON A DOOR SHALL BE FULLY TEMPERED, OR HAVE APPROVED METAL BARS, SCREENS OR GRILLS

10. SOLID WOODEN HATCHWAYS LESS THAN 1-3/4" THICK SHALL BE COVERED ON THE INSIDE WITH 16 GUAGE SHEET METAL ATTACHED WITH SCREWS AT 6" ON-CENTER AROUND THE PERIMETER AND SHALL BE SECURED FROM THE INSIDE WITH A SLIDE BAR, SLIDE BOLTS, AND/OR PADLOCK WITH HARDENED STEEL SHACKLE. ALL OTHER OPENINGS LARGER THAN 96 SQUARE INCHES WITH A DIMENSION IN EXCESS OF 8" SHALL BE SECURED BY METAL BARS SCREENS, OR GRILLS. (EXCEPTION: NON-OPENING SKYLIGHTS).

11. A DEVELOPMENT WHICH INCLUDES 3 OR MORE DWELLING UNITS SHALL BE PROVIDED WITH FULLY-ENCLOSED GARAGES. GARAGE SPACE FOR EACH TENANT SHALL BE SEPARATED BY PARTITIONS OF 3/8" PLYWOOD OR EQUIVALENT WITH STUDS SET NO MORE THAN 24" O.C.

12. ALL DORS AND WINDOWS SHALL MEET HUNTINGTON BEACH SECURITY ORDINANCE.

CITY OF HUNTINGTON BEACH GENERAL NOTES

1. APPLICATIONS FOR WHICH NO PERMIT IS ISSUED WITHIN 180 DAYS FOLLOWING THE DATE OF APPLICATION SHALL AUTOMATICALLY EXPIRE. (R105.3.2)

2. EVERY PERMIT ISSUED SHALL BECOME INVALID UNLESS WORK AUTHORIZED IS COMMENCED WITHIN 180 DAYS OR IF THE WORK AUTHORIZED IS SUSPENDED OR ABANDONED FOR A PERIOD OF 180 DAYS. A SUCCESSFUL INSPECTION MUST BE OBTAINED WITHIN 180 DAYS. A PERMIT MAY BE EXTENDED IF A WRITTEN REQUEST STATING JUSTIFICATION FOR EXTENSION AND AN EXTENSION FEE IS RECEIVED PRIOR TO EXPIRATION OF THE PERMIT AND GRANTED BY THE BUILDING OFFICIAL. NO MORE THAN ONE (1) EXTIENSION MAY BE GRANTED. PERMITS WHICH HAVE BECOME INVALID SHALL PAY A REACTIVATION FEE OF APPROXIMATELY 50% OF THE ORIGINAL PERMIT FEE AMOUNT WHEN THE PERMIT HAS BEEN EXPIRED FOR UP TO SIX(6) MONTHS. WHEN A PERMIT HAS BEEN EXPIRED FOR A PERIOD IN EXCESS OF ONE (1) YEAR, THE REACTIVATION FEE SHALL BE APPROXIMATELY 100% OF THE ORIGINAL PERMIT FEE (R105.5)

3. FIRE SPRINKLER PLANS STAMPED APPROVED BY THE CITY OF HUNTINGBEACH FIRE DEPARTMENT SHALL BE PROVIDED AT THE SITE AT TIME OF FRAMING INSPECTION.

4. CONCRETE SLAB AND UNDER-FLOOR INSPECTIONS SHALL BE MADE AFTER IN-SLAB OR UNDER-FLOOR REINFORCING STEEL AND BUILDING SERVICE EQUIPMENT, CONDUITS, PIPING OR OTHER ANCILLARY BUILDING TRADE PRODUCTS OR EQUIPMENT ARE INSTALLED, BUT BEFORE ANY CONCRETE IS PLACED OR FLOOR SHEATHING IS INSTALLED, INCLUDING THE SUBFLOOR. (R109.1.1.1)

5. ROUGH INSPECTION OF PLUMBING, MECHANICAL, GAS AND ELECTRICAL SYSTEMS SHALL BE MADE PRIOR TO COVERING OR CONCEALMENT, BEFORE FIXTURES OR APPLIANCES ARE SET OR INSTALLED, AND PRIOR TO FRAMING INSPECTION. (109.1.2)

6. WATER CLOSETS SHALL HAVE AN AVERAGE WATER CONSUMPTION OF NOT MORE THAN 1.28 GALLONS OF WATER PER FLUSH (402.1.2)

7. SHOWER HEADS SHALL HAVE A WATER FLOW NOT TO EXCEED 2.0 GALLONS PER MINUTE (402.1.1 CPC)

8. FAUCETS IN KITCHENS, WET BARS, LAVATORIES, LAUNDRY, ETC. SHALL HAVE A WATER FLOW NOT TO EXCEED 1.8 GALLONS PER MINUTE. (402.1.2.CPC)

NOTE REGARDING CF-6R & CF-4R

ALL APPLICABLE INSTALLATION CERTIFICATE FORMS (CF-6R) & ALL APPLICABLE CERTIFICATE OF FIELD VERIFICATION AND DIAGNOSTIC TESTING FORMS (CF-4R) MUST BE COMPLETED & PRESENTED TO THE CITY FIELD INSPECTOR PRIOR TO FINAL INSPECTION SIGN-OFF.

9. WATER PIPING MATERIALS WITHIN A BUILDING SHALL BE IN ACCORDANCE WITH SEC 604.1 OF THE CALIFORNIA PLUMING CODE. PEX, CPVC AND OTHER PLASTIC WATER PIPING SYSTEMS SHALL BE INSTALLED IN ACCORDANCE WITH THE REQUIREMENTS OF SEC 604 OF THE CPC, INSTALLATION STANDARDS OF APPENDIX I OF THE CPC AND MANUFACTURERS RECOMMENDED INSTALLATION STANDARDS. CPVC WATER PIPING REQUIRES A CERTIFICATION OF COMPLANCE AS SPECIFIED IN SEC. 604.1.1 OF THE CPC PRIOR TO PERMIT ISSUANCE.

10. THE RECOMMENDATIONS OF THE SOILS INVESTIGATION REPORT SHALL BE INCORPORATED ON THE ARCHITECTURAL AND GRADING PLANS.

FIRE DEPARTMENT NOTES

1. MAINTAIN JOBSITE SAFETY DURING CONSTRUCTION AS PER CHAPTER 33 OF THE 2013 CALIFORNIA FIRE CODE.
2. A 13D RESIDENTIAL FIRE SPRINKLER SYSTEM IS REQUIRED. A DEFERRED SUBMITTAL FOR FIRE SPRINKLERS ()COMPLYING WITH NFPA 13D) IS REQUIRED.
   NOTE: FIRE FLOW INFORMATION FROM THE CITY OF HUNTINTON BEACH IS REQUIRED TO BE INCLUDED WITH ANY SPRINKLER PLAN SUBMITTALS. TO OBTAIN THE FIRE FLOW INFORMATION, HAVE THE SPRINKLER CONTRACTOR COMPLETE THE "FIRE FLOW INFORMATION FORM" IN WORD FORMAT AVAILABLE AT THE FOLLOWING LINK:
   https://www.huntingtonbeachca.gov/government/departments/fire/fire_prevention_code_enforcement/plan-check-services.cfm
   SEND THIS FIRE FLOW INFORMATION REQUEST TO Jacob.Worthy@surfcity-hb.org.
   ONCE SUBMITYTED, THE HBFD WILL FORWARD THE REQUEST TO THE PUBLIC WORKS DEPARTMENT. THE AVERAGE TURNAROUND TIME FOR FIRE FLOW INFORMATION REQUESTS IS 10 BUSINESS DAYS.
3. THE EXISTING HOME IS NOT REQUIRED TO, BUT MAY HAVE, A METHANE BARRIER,DUE TO THE PROXIMITY OF A NEARBY OIL WELL AND THE YEAR THE HOME WAS BUILT. IF AT ANYTIME DURING CONSTRUCTION A SUB-SLAB METHANE BARRIER IS LOCATED, ALL WORK SHALL STOP. THE EXISTING SUB-SLAB BARRIER MUST BE REPAIRED AFTER A DEFERRED SUBMITTAL TO HBFD IS REVIEWED AND APPROVED.
4. ADDRESS NUMBERS MUST BE PLACED OVER THE EXTERIOR OF THE MAIN ENTRANCE AS PER CITY SPECIFICATION #428. MINIMUM SIZE OF NUMBERS IS 4", AND THEY MUST CONTRAST WITH THE BACKGROUND.
5. FOR FIRE DEPARTMENT INSPECTIONS CALL (714) 536-5411 AT LEAST 3 DAYS IN ADVANCE TO SCHEDULE INSPECTIONS.

REGARDING FLOOD HAZARD DISTRICT

PER THE PLANNING DEPARTMENT, A SMALL CORNER OF THE LOT IS IN FLOOD ZONE 'AE'.

DEFERRED SUBMITTALS

DEFERRED SUBMITTAL FOR FIRE SPRINKLERS. PLEASE SEE NOTE #2 ON 'FIRE DEPARTMENT NOTES' ABOVE.

CONSULTANTS

DESIGN:
MARK WHEELER RESIDENTIAL DESIGN
325 ROYCROFT AVENUE
LONG BEACH, CA. 90814
OFFICE: 562-856-5665
FAX: 562-684-0570
CONTACT: MARK WHEELER

STRUCTURAL:
SCOTT ARMSTRONG ENGINEERING
25068 VIA LAS LOMAS
MURRIETA, CA
(714) 225-7056
CONTACT: SCOTT ARMSTRONG

CONTRACTOR:
JIM HASKETT CONSTRUCTION
PO BOX 512
SURFSIDE COLONY, CA 90743
(714) 894-4800
CONTACT: JIM HASKETT

BEST MANAGEMENT PRACTICES

BEST MANAGEMENT PRACTICES NOTE:

AS THE DESIGNER/ENGINEER OF RECORD, I HAVE SELECTED APPROPRIATE BEST MANAGEMENT PRACTICES (BMPS) TO EFFECTIVELY MINIMIZE IMPACTS OF THIS PROJECT'S CONSTRUCTION ACTIVITIES ON STORM WATER QUALITY. THE PROJECT OWNER AND CONTRACTOR ARE AWARE THAT SELECTED BMPS MUST BE INSTALLED, MONITORED AND MAINTAINED TO ENSURE THEIR EFFECTIVENESS. THE BMPS NOT SELECTED FOR IMPLEMENTATION ARE REDUNDANT OR DEEMED NOT APPLICABLE TO THE PROPOSED CONSTRUCTION ACTIVI
CONSTRUCTION BMPS THAT APPLY:
(CA-10, 11, 12, 20, 21, 23, 30, 31, 32, CD-4(2), ECS-1 THRU 56)

NAME _____ LICENSE NO. _____ EXP. _____

PROJECT DATA

SCOPE OF WORK:
FIRST FLOOR: 142 S.F. FAMILY ROOM ADDITION. REBUILD EXISTING OUTDOOR COVERED PATIO AREA. ADD NEW OUTDOOR KITCHEN SPACE.
SECOND FLOOR: ADD 504 S.F. MASTER SUITE & BEDROOM 4 ADDITION. CREATE NEW FAMILY ROOM FROM EXISTING BEDROOMS AND OPEN UP STAIRWELL. REBUILD EXISTING BALCONY & ADD ROOF TO CREATE COVERED BALCONY.

BUILDING AREA:
LOT AREA: 6,000 SQUARE FEET

LOT COVERAGE:	RESIDENCE:	1,767 s.f.	29.5%
	GARAGE:	570 s.f.	9.5%
	COVERED:	652 s.f.	10.8%
F.A.R.: .49	TOTAL:	2,989 s.f.	49.8%

GROSS FLOOR AREA--FIRST FLOOR (SQ. FT.)-

	LIVING	GARAGE	COV. PATIO	TOTAL
EXISTING:	1625	570	396	2591
NEW:	142	0	256	398
TOTAL:	1767	570	652	2989

GROSS FLOOR AREA--SECOND FLOOR (SQ. FT.)-

	LIVING	BALCONY	TOTAL
EXISTING:	1661	453	2114
NEW:	504	196	700
TOTAL:	2165	649	2814

GROSS FLOOR AREA--TOTAL (SQ. FT.)-

	LIVING	BALCONY	COV. PATIO	GARAGE	TOTAL
EXISTING:	3286	453	396	570	4705
NEW:	646	196	256	0	1098
TOTAL:	3932	649	652	570	5803

SHEET INDEX

T-1	TITLE SHEET / VICINITY MAP
T-2	CALGREEN
T-3	CALGREEN
T-4	CONSTRUCTION & DEMOLITION DEBRIS REUSE & RECYCLING
T-24.1	TITLE 24
T-24.2	TITLE 24
T-24.3	TITLE 24
A-1.0	SITE PLAN
A-1.1	PHOTOS OF ADJACENT PROPERTIES
A-2.0	PROPOSED PAINT AND MATERIALS
A-3.0	FIRST FLOOR PLAN
A-3.1	SECOND FLOOR PLAN & TECHNICAL DETAILS
A-4.0	ELECTRICAL & REFLECTED CEILING PLAN
A-5.0	PROPOSED ELEVATIONS
A-5.1	PROPOSED ELEVATIONS
A-5.2	EXISTING ELEVATIONS
A-6.0	ROOF PLAN
A-7.0	MATERIALS & DETAILS
SOILS	SOILS DETAILS
SGN	STRUCTURAL GENERAL NOTES
S-1	FOUNDATION PLAN
S-2	FIRST FLOOR FRAMING PLAN
S-3	SECOND FLOOR FRAMING PLAN
S-4	STRUCTURAL DETAILS
S-5	STRUCTURAL DETAILS
S-6	STRUCTURAL DETAILS
SSW-1	STEEL STRONG-WALL ANCHORAGE DETAILS
SSW-2	STEEL STRONG-WALL FRAMING DETAILS

PROJECT LEGEND

CLIENT & PROJECT ADDRESS:
THE CIRKS RESIDENCE
3542 VENTURE DRIVE
HUNTINGTON BEACH, CA 92648

THIS PROJECT SHALL COMPLY WITH:
2022 EDITION OF THE CALIFORNIA RESIDENTIAL CODE
2022 EDITION OF THE CALIFORNIA BUILDING CODE
2022 EDITION OF THE CALGREEN CODE
2022 EDITION OF THE CALIFORNIA MECHANICAL CODE
2022 EDITION OF THE CALIFORNIA PLUMBING CODE
2022 EDITION OF THE CALIFORNIA ELECTRICAL CODE
2022 CALIFORNIA ENERGY CODE
-

ZONING INFORMATION
ZONE: RL-CZ
OCCUPANCY: R-3/U
CONSTRUCTION TYPE: TYPE V-B
SPRINKLERS: NO

LEGAL DESCRIPTION:
APN: 178-713-04
N TR 9335 BLK LOT 43

NOTES

FLOOR PLAN NOTES

1. ALL DIMENSIONS ARE TO FACE OF FINISH (F.O.F.) UNLESS OTHERWISE NOTED.
2. VERIFY EXISTING DIMENSIONS FROM EXISTING RESIDENCE
3. SLEEP ROOMS: AT LEAST ONE WINDOW WITH CLEAR OPENING SHALL BE AT LEAST 5.75 SQ.FT.(24" HIGH X 20" WIDE) AND FIN. SILL HEIGHT SHALL NOT EXCEED 44" FROM FIN. FLOOR
4. SAFETY GLASS FOR GLAZING IN HAZARDOUS LOCATIONS SUCH AS GLASS DOORS, GLASS WINDOWS ADJACENT TO DOORS AND WALKING SURFACES SHALL BE PROVIDED.
5. PROVIDE SHATTERPROOF GLASS ENCLOSURE AT SHOWER AND TUB AREAS
6. ALL INTERIOR WALLS SHALL HAVE 5/8" GYP. BD.-MINIMUM (U.N.O.)

Mark M. Wheeler
April 1, 2024

REVISIONS	–
	MMW
–	–
–	–

The Cirks Residence
3542 VENTURE DRIVE ~ TRINIDAD ISLAND ~ HUNTINGTON BEACH, CA 92648

mark wheeler
RESIDENTIAL DESIGN
325 ROYCROFT AVENUE
LONG BEACH, CA. 90814
562-856-5665
562-619-3990
562-684-0570

DATE: 4-1-24
SCALE: AS NOTED
DRAWN:MMW
JOB: A-789
SHEET: T-1
OF – SHEETS

GENERAL INFORMATION

01	Project Name	3542 Venture addition			
02	Run Title	Title 24 Analysis			
03	Project Location	3542 Venture Dr			
04	City	Huntington Beach, CA	05	Standards Version	2022
06	Zip code	92649	07	Software Version	CBECC-Res 2022.3.0
08	Climate Zone	6	09	Front Orientation (deg/ Cardinal)	30
10	Building Type	Single family	11	Number of Dwelling Units	1
12	Project Scope	Addition and/or Alteration	13	Number of Bedrooms	4
14	Addition Cond. Floor Area (ft^2)	646	15	Number of Stories	2
16	Existing Cond. Floor Area (ft^2)	3304	17	Fenestration Average U-factor	0.35
18	Total Cond. Floor Area (ft^2)	3950	19	Glazing Percentage (%)	20.89%
20	ADU Bedroom Count	n/a	21	ADU Conditioned Floor Area	n/a
22	Fuel Type	Natural gas	23	No Dwelling Unit:	No

COMPLIANCE RESULTS

01	Building Complies with Computer Performance
02	This building incorporates features that require field testing and/or verification by a certified HERS rater under the supervision of a CEC-approved HERS provider.
03	This building incorporates one or more Special Features shown below

ENERGY USE SUMMARY

Energy Use	Standard Design Source Energy (EDR1) (kBtu/ft^2 -yr)	Standard Design TDV Energy (EDR2) (kTDV/ft^2 -yr)	Proposed Design Source Energy (EDR1) (kBtu/ft^2 -yr)	Proposed Design TDV Energy (EDR2) (kTDV/ft^2 -yr)	Compliance Margin (EDR1)	Compliance Margin (EDR2)
Space Heating	0	33.11	0	25.56	0	7.55
Space Cooling	0	37.49	0	48.39	0	-10.9
IAQ Ventilation	0	6.7	0	3.16	0	3.54
Water Heating	0	10.52	0	10.52	0	0
Self Utilization/Flexibility Credit						
Efficiency Compliance Total	**0**	**87.82**	**0**	**87.63**	**0**	**0.19**
Photovoltaics		0		0		
Battery				0		
Flexibility						
Indoor Lighting	0	6.67	0	6.67		
Appl. & Cooking	0	11.64	0	11.7		
Plug Loads	0	16.95	0	16.95		
Outdoor Lighting	0	1.67	0	1.67		
TOTAL COMPLIANCE	**0**	**124.75**	**0**	**124.62**		

ENERGY USE INTENSITY

	Standard Design (kBtu/ft^2 - yr)	Proposed Design (kBtu/ft^2 - yr)	Compliance Margin (kBtu/ft^2 - yr)	Margin Percentage
Gross EUI[1]	19.84	18.85	0.99	4.99
Net EUI[2]	19.84	18.85	0.99	4.99

Notes
1. Gross EUI is Energy Use Total (not including PV) / Total Building Area.
2. Net EUI is Energy Use Total (including PV) / Total Building Area.

REQUIRED SPECIAL FEATURES

The following are features that must be installed as condition for meeting the modeled energy performance for this computer analysis.

- Indoor air quality, balanced fan
- IAQ Ventilation System: as low as 0.3 W/CFM
- IAQ Ventilation System Heat Recovery: minimum 75 SRE and 80 ASRE
- IAQ Ventilation System: supply outside air inlet, filter, and H/ERV cores accessible per RACM Reference Manual
- Exposed slab floor in conditioned zone

HERS FEATURE SUMMARY

The following is a summary of the features that must be field-verified by a certified HERS Rater as a condition for meeting the modeled energy performance for this computer analysis. Additional detail is provided in the building tables below. Registered CF2Rs and CF3Rs are required to be completed in the HERS Registry

- Duct leakage testing

BUILDING - FEATURES INFORMATION

01	02	03	04	05	06	07
Project Name	Conditioned Floor Area (ft^2)	Number of Dwelling Units	Number of Bedrooms	Number of Zones	Number of Ventilation Cooling Systems	Number of Water Heating Systems
3542 Venture addition	3950	1	4	4	0	1

ZONE INFORMATION

01	02	03	04	05	06	07
Zone Name	Zone Type	HVAC System Name	Zone Floor Area (ft^2)	Avg. Ceiling Height	Water Heating System 1	Status
House 1st floor	Conditioned	HVAC ex	1643	8.6	DHW ex	Existing Unchanged
House 2nd floor	Conditioned	HVAC ex	1661	8.2	DHW ex	Existing Unchanged
Addition 1st floor	Conditioned	HVAC ex	142	8.1	DHW ex	New
Addition 2nd floor	Conditioned	HVAC ex	504	8.1	DHW ex	New

OPAQUE SURFACES

01	02	03	04	05	06	07	08	09	10	11
Name	Zone	Construction	Azimuth	Orientation	Gross Area (ft^2)	Window and Door Area (ft2)	Tilt (deg)	Wall Exceptions	Status	Verified Existing Condition
Wall-ex-F 1	House 1st floor	Wall ex	30	Front	233	117.352	90	none	Existing	No
Wall-ex-L 1	House 1st floor	Wall ex	120	Left	356	0	90	none	Existing	No
Wall-ex-B 1	House 1st floor	Wall ex	210	Back	231	116.75	90	none	Existing	No
Wall-ex-R 1	House 1st floor	Wall ex	300	Right	280	37.8	90	none	Existing	No
Wall-ex-F 2	House 2nd floor	Wall ex	30	Front	62	7	90	none	Existing	No
Wall-a-L	House 2nd floor	Wall alt	120	Left	62	0	90	none	Altered	No
Wall-ex-L 2	House 2nd floor	Wall ex	120	Left	231	30.35	90	none	Existing	No
Wall-ex-B 2	House 2nd floor	Wall ex	210	Back	255	126.73	90	none	Existing	No
Wall-ex-R 2	House 2nd floor	Wall ex	300	Right	296	7	90	none	Existing	No
Wall-n-L 1	Addition 1st floor	Wall new	120	Left	65	48	90	none	New	n/a
Wall-n-B 1	Addition 1st floor	Wall new	210	Back	173	133.5	90	none	New	n/a
Wall-n-R 1	Addition 1st floor	Wall new	300	Right	65	10	90	none	New	n/a
Wall-n-F	Addition 2nd floor	Wall new	30	Front	283	67.275	90	none	New	n/a

OPAQUE SURFACES

01	02	03	04	05	06	07	08	09	10	11
Name	Zone	Construction	Azimuth	Orientation	Gross Area (ft^2)	Window and Door Area (ft2)	Tilt (deg)	Wall Exceptions	Status	Verified Existing Condition
Wall-n-L 2	Addition 2nd floor	Wall new	120	Left	127	23.345	90	none	New	n/a
Wall-n-B 2	Addition 2nd floor	Wall new	210	Back	155	80.04	90	none	New	n/a
Wall-n-R 2	Addition 2nd floor	Wall new	300	Right	156	0	90	none	New	n/a
Interior Wall-ex to Garage	House 1st floor>>Garage	Wall Int ex	n/a	n/a	301	16.7	n/a		Existing	No
Interior Wall to Addition 1st floor	House 1st floor>>Addition 1st floor	Wall Int R0	n/a	n/a	167	0	n/a		Existing	No
Interior Wall-ex to Attic-ex	House 2nd floor>>Attic-ex	Wall Int ex	n/a	n/a	53	0	n/a		Existing	No
Ceiling-e	House 2nd floor	Ceiling attic ex	n/a	n/a	1623	n/a	n/a		Existing	No
Ceiling-n	Addition 2nd floor	Ceiling attic new	n/a	n/a	504	n/a	n/a		New	n/a
Exterior Floor-ex	House 2nd floor	Floor Raised ex	n/a	n/a	100	n/a	n/a		Existing	No
Exterior Floor-n	Addition 2nd floor	Floor Raised new	n/a	n/a	25	n/a	n/a		New	n/a
Interior Floor-ex over Garage	House 2nd floor	Floor Int ex	n/a	n/a	213	n/a	n/a		Existing	No
Interior Floor over Addition 1st floor 1	House 2nd floor	Floor Int R0	n/a	n/a	34	n/a	n/a		Existing	No
Interior Floor over House 1st floor 1	House 2nd floor	Floor Int R0	n/a	n/a	1314	n/a	n/a		Existing	No
Interior Floor-n over Garage	Addition 2nd floor	Floor Int new	n/a	n/a	258	n/a	n/a		New	n/a

OPAQUE SURFACES

01	02	03	04	05	06	07	08	09	10	11
Name	Zone	Construction	Azimuth	Orientation	Gross Area (ft^2)	Window and Door Area (ft2)	Tilt (deg)	Wall Exceptions	Status	Verified Existing Condition
Interior Floor over Addition 1st floor 2	Addition 2nd floor	Floor Int R0	n/a	n/a	100	n/a	n/a		New	n/a
Interior Floor over House 1st floor 2	Addition 2nd floor	Floor Int R0	n/a	n/a	121	n/a	n/a		New	n/a
GWall-ex-F	Garage	Wall Gar	30	Front	227	168	90	none	Existing	No
GWall-ex-L	Garage	Wall Gar	120	Left	92	0	90	none	Existing	No
GWall-ex-R	Garage	Wall Gar	300	Right	169	0	90	none	Existing	No

OPAQUE SURFACES - CATHEDRAL CEILINGS

01	02	03	04	05	06	07	08	09	10	11	12	13	14
Name	Zone	Construction	Azimuth	Orientation	Area (ft^2)	Skylight Area (ft^2)	Roof Rise (x in 12)	Roof Reflectance	Roof Emittance	Cool Roof	Status	Verified Existing Condition	Existing Construction
Cathedral-ex	House 1st floor	Ceiling cath ex	120	Left	276	0	5.5	0.1	0.85	No	Existing	No	
SkylightArea 1	House 2nd floor	Skylight area alt	300	Right	9	9	5.5	0.1	0.85	No	Altered	No	
SkylightArea 2	House 2nd floor	Skylight area alt	120	Left	29	29	5.5	0.1	0.85	No	Altered	No	
Cathedral-n	Addition 1st floor	Ceiling cath new	210	Back	10	0	0.25	0.1	0.85	No	New	n/a	
GCathedral-ex	Garage	Ceiling cath Gar	30	Front	568	0	0.25	0.1	0.85	No	Existing	No	

ATTIC

01	02	03	04	05	06	07	08	09	10
Name	Construction	Type	Roof Rise (x in 12)	Roof Reflectance	Roof Emittance	Radiant Barrier	Cool Roof	Status	Verified Existing Condition
Attic-ex	Roof ex	Ventilated	5.5	0.1	0.85	No	No	Existing	No
Attic-new	Roof new	Ventilated	5.5	0.1	0.85	Yes	No	New	n/a

FENESTRATION / GLAZING

01	02	03	04	05	06	07	08	09	10	11	12	13	14	15	16
Name	Type	Surface	Orientation	Azimuth	Width (ft)	Height (ft)	Mult.	Area (ft^2)	U-factor	U-factor Source	SHGC	SHGC Source	Exterior Shading	Status	Verified Existing Condition
Wind-a-A	Window	Wall-ex-F 1	Front	30	2	6.33	1	12.66	0.34	NFRC	0.28	NFRC	Bug Screen	Altered	No
Wind-ex	Window	Wall-ex-F 1	Front	30			1	25	1.28	Table 110.6-A	0.8	Table 110.6-B	Bug Screen	Existing	No
GlDoor-a-1	Window	Wall-ex-F 1	Front	30	3.5	8	1	28	0.35	NFRC	0.35	NFRC	Bug Screen	Altered	No
GlDoor-a-2	Window	Wall-ex-F 1	Front	30	7.75	6.67	1	51.69	0.35	NFRC	0.35	NFRC	Bug Screen	Altered	No
Wind-a-B	Window	Wall-ex-B 1	Back	210	5.75	5	1	28.75	0.34	NFRC	0.28	NFRC	Bug Screen	Altered	No
GlDoor-a-8	Window	Wall-ex-B 1	Back	210	11	8	1	88	0.35	NFRC	0.35	NFRC	Bug Screen	Altered	No
Wind-n-F 1	Window	Wall-ex-R 1	Right	300	5	2	1	10	0.34	NFRC	0.28	NFRC	Bug Screen	New	NA
Wind-n-F 2	Window	Wall-ex-R 1	Right	300	5	2	1	10	0.34	NFRC	0.28	NFRC	Bug Screen	New	NA
Wind-a-J	Window	Wall-ex-F 2	Front	30	2	3.5	1	7	0.34	NFRC	0.28	NFRC	Bug Screen	Altered	No
Wind-a-K	Window	Wall-ex-L 2	Left	120	5	4.67	1	23.35	0.34	NFRC	0.28	NFRC	Bug Screen	Altered	No

FENESTRATION / GLAZING

01	02	03	04	05	06	07	08	09	10	11	12	13	14	15	16
Name	Type	Surface	Orientation	Azimuth	Width (ft)	Height (ft)	Mult.	Area (ft^2)	U-factor	U-factor Source	SHGC	SHGC Source	Exterior Shading	Status	Verified Existing Condition
Wind-a-L	Window	Wall-ex-L 2	Left	120	2	3.5	1	7	0.34	NFRC	0.28	NFRC	Bug Screen	Altered	No
GlDoor-a-17	Window	Wall-ex-B 2	Back	210	6	6.67	1	40.02	0.35	NFRC	0.35	NFRC	Bug Screen	Altered	No
GlDoor-n-18	Window	Wall-ex-B 2	Back	210	13	6.67	1	86.71	0.35	NFRC	0.35	NFRC	Bug Screen	New	NA
Wind-a-N	Window	Wall-ex-R 2	Right	300	2	3.5	1	7	0.34	NFRC	0.28	NFRC	Bug Screen	Altered	No
Wind-n-C	Window	Wall-n-L 1	Left	120	6	8	1	48	0.34	NFRC	0.28	NFRC	Bug Screen	New	NA
Wind-n-E	Window	Wall-n-B 1	Back	210	7	6.5	1	45.5	0.34	NFRC	0.28	NFRC	Bug Screen	New	NA
GlDoor-n-9	Window	Wall-n-B 1	Back	210	11	8	1	88	0.35	NFRC	0.35	NFRC	Bug Screen	New	NA
Wind-n-F 3	Window	Wall-n-R 1	Right	300	5	2	1	10	0.34	NFRC	0.28	NFRC	Bug Screen	New	NA
Wind-n-O 1	Window	Wall-n-F	Front	30	2	3.5	1	7	0.34	NFRC	0.28	NFRC	Bug Screen	New	NA
Wind-n-O 2	Window	Wall-n-F	Front	30	2	3.5	1	7	0.34	NFRC	0.28	NFRC	Bug Screen	New	NA
Wind-n-O 3	Window	Wall-n-F	Front	30	2	3.5	1	7	0.34	NFRC	0.28	NFRC	Bug Screen	New	NA
Wind-n-H	Window	Wall-n-F	Front	30	7.5	1.5	1	11.25	0.34	NFRC	0.28	NFRC	Bug Screen	New	NA
Wind-n-G	Window	Wall-n-F	Front	30	7.5	4.67	1	35.02	0.34	NFRC	0.28	NFRC	Bug Screen	New	NA
Wind-n-M	Window	Wall-n-L 2	Left	120	3.5	6.67	1	23.34	0.34	NFRC	0.28	NFRC	Bug Screen	New	NA
GlDoor-n-19	Window	Wall-n-B 2	Back	210	12	6.67	1	80.04	0.35	NFRC	0.35	NFRC	Bug Screen	New	NA

FENESTRATION / GLAZING

01	02	03	04	05	06	07	08	09	10	11	12	13	14	15	16
Name	Type	Surface	Orientation	Azimuth	Width (ft)	Height (ft)	Mult.	Area (ft^2)	U-factor	U-factor Source	SHGC	SHGC Source	Exterior Shading	Status	Verified Existing Condition
Skylights-n-P	Skylight	SkylightArea 1	Right	300			1	9	0.43	NFRC	0.25	NFRC		New	NA
Skylights-n-Q	Skylight	SkylightArea 2	Left	120			1	29	0.43	NFRC	0.25	NFRC		New	NA

OPAQUE DOORS

01	02	03	04	05	06
Name	Side of Building	Area (ft^2)	U-factor	Status	Verified Existing Condition
Door-ex-7	Wall-ex-R 1	17.8	0.5	Existing	No
Door-ex-5	Interior Wall-ex to Garage	16.7	0.5	Existing	No
GarDoor-ex-4	GWall-ex-F	112	1	Existing	No
GarDoor-ex-3	GWall-ex-F	56	1	Existing	No

SLAB FLOORS

01	02	03	04	05	06	07	08	09	10
Name	Zone	Area (ft^2)	Perimeter (ft)	Edge Insul. R-value and Depth	Edge Insul. R-value and Depth	Carpeted Fraction	Heated	Status	Verified Existing Condition
Slab On Grade-ex	House 1st floor	1643	130	none	0	0%	No	Existing	No
Slab On Grade-n	Addition 1st floor	142	38	none	0	0%	No	New	n/a
GSlab On Grade-ex	Garage	568	60	none	0	0%	No	Existing	No

3542 Venture addition
3542 Venture Dr, Huntington Beach, CA 92649

SHEET
T24-1

OPAQUE SURFACE CONSTRUCTIONS

01	02	03	04	05	06	07	08
Construction Name	**Surface Type**	**Construction Type**	**Framing**	**Total Cavity R-value**	**Interior / Exterior Continuous R-value**	**U-factor**	**Assembly Layers**
Wall ex	Exterior Walls	Wood Framed Wall	2x4 @ 16 in. O. C.	R-0	None / None	0.387	Inside Finish: Gypsum Board Cavity / Frame: no insul. / 2x4
Wall alt	Exterior Walls	Wood Framed Wall	2x4 @ 16 in. O. C.	R-13	None / None	0.093	Inside Finish: Gypsum Board Cavity / Frame: R-13 / 2x4 Sheathing / Insulation: Wood Siding/sheathing/decking Exterior Finish: 3 Coat Stucco
Wall new	Exterior Walls	Wood Framed Wall	2x4 @ 16 in. O. C.	R-13	None / None	0.093	Inside Finish: Gypsum Board Cavity / Frame: R-13 / 2x4 Sheathing / Insulation: Wood Siding/sheathing/decking Exterior Finish: 3 Coat Stucco
Wall Gar	Exterior Walls	Wood Framed Wall	2x4 @ 16 in. O. C.	R-0	None / None	0.387	Inside Finish: Gypsum Board Cavity / Frame: no insul. / 2x4
Ceiling cath ex	Cathedral Ceilings	Wood Framed Ceiling	2x10 @ 24 in. O. C.	R-0	None / None	0.332	Roofing: 10 PSF (RoofTileAirGap) Tile Gap: present Roof Deck: Wood Siding/sheathing/decking Cavity / Frame: no insul. / 2x10 Inside Finish: Gypsum Board
Ceiling cath new	Cathedral Ceilings	Wood Framed Ceiling	2x10 @ 24 in. O. C.	R-30	None / None	0.034	Roofing: 10 PSF (RoofTileAirGap) Tile Gap: present Roof Deck: Wood Siding/sheathing/decking Cavity / Frame: R-30 / 2x10 Inside Finish: Gypsum Board

OPAQUE SURFACE CONSTRUCTIONS

01	02	03	04	05	06	07	08
Construction Name	**Surface Type**	**Construction Type**	**Framing**	**Total Cavity R-value**	**Interior / Exterior Continuous R-value**	**U-factor**	**Assembly Layers**
Skylight area alt	Cathedral Ceilings	Wood Framed Ceiling	2x4 Top Chord of Roof Truss @ 24 in. O. C.	R-19	None / None	0.053	Roofing: 10 PSF (RoofTileAirGap) Tile Gap: present Roof Deck: Wood Siding/sheathing/decking Cavity / Frame: R-19 / 2x4 Top Chrd Inside Finish: Gypsum Board
Ceiling cath Gar	Cathedral Ceilings	Wood Framed Ceiling	2x4 Top Chord of Roof Truss @ 24 in. O. C.	R-0	None / None	0.494	Roofing: Light Roof (Asphalt Shingle) Roof Deck: Wood Siding/sheathing/decking Cavity / Frame: no insul. / 2x4 Top Chrd Inside Finish: Gypsum Board
Wall Int R0	Interior Walls	Wood Framed Wall	2x4 @ 16 in. O. C.	R-0	None / None	0.277	Inside Finish: Gypsum Board Cavity / Frame: no insul. / 2x4 Other Side Finish: Gypsum Board
Wall Int ex	Interior Walls	Wood Framed Wall	2x4 @ 16 in. O. C.	R-0	None / None	0.277	Inside Finish: Gypsum Board Cavity / Frame: no insul. / 2x4 Other Side Finish: Gypsum Board
Roof ex	Attic Roofs	Wood Framed Ceiling	2x4 Top Chord of Roof Truss @ 24 in. O. C.	R-0	None / None	0.4	Roofing: 10 PSF (RoofTileAirGap) Tile Gap: present Roof Deck: Wood Siding/sheathing/decking Cavity / Frame: no insul. / 2x4 Top Chrd
Roof new	Attic Roofs	Wood Framed Ceiling	2x4 Top Chord of Roof Truss @ 24 in. O. C.	R-0	None / None	0.4	Roofing: 10 PSF (RoofTileAirGap) Tile Gap: present Roof Deck: Wood Siding/sheathing/decking Cavity / Frame: no insul. / 2x4 Top Chrd
Ceiling attic ex	Ceilings (below attic)	Wood Framed Ceiling	2x4 @ 24 in. O. C.	R-0	None / None	0.481	Cavity / Frame: no insul. / 2x4 Inside Finish: Gypsum Board

OPAQUE SURFACE CONSTRUCTIONS

01	02	03	04	05	06	07	08
Construction Name	**Surface Type**	**Construction Type**	**Framing**	**Total Cavity R-value**	**Interior / Exterior Continuous R-value**	**U-factor**	**Assembly Layers**
Ceiling attic new	Ceilings (below attic)	Wood Framed Ceiling	2x4 @ 24 in. O. C.	R-30	None / None	0.032	Over Ceiling Joists: R-20.9 insul. Cavity / Frame: R-9.1 / 2x4 Inside Finish: Gypsum Board
Floor Raised ex	Exterior Floors	Wood Framed Floor	2x6 @ 16 in. O. C.	R-0	None / None	0.244	Floor Surface: Carpeted Floor Deck: Wood Siding/sheathing/decking Cavity / Frame: no insul. / 2x6
Floor Raised new	Exterior Floors	Wood Framed Floor	2x6 @ 16 in. O. C.	R-19	None / None	0.048	Floor Surface: Carpeted Floor Deck: Wood Siding/sheathing/decking Cavity / Frame: R-19 / 2x6 Sheathing / Insulation: Wood Siding/sheathing/decking
Floor Int R0	Interior Floors	Wood Framed Floor	2x6 @ 16 in. O. C.	R-0	None / None	0.199	Floor Surface: Carpeted Floor Deck: Wood Siding/sheathing/decking Cavity / Frame: no insul. / 2x6 Ceiling Below Finish: Gypsum Board
Floor Int ex	Interior Floors	Wood Framed Floor	2x6 @ 16 in. O. C.	R-0	None / None	0.199	Floor Surface: Carpeted Floor Deck: Wood Siding/sheathing/decking Cavity / Frame: no insul. / 2x6 Ceiling Below Finish: Gypsum Board
Floor Int new	Interior Floors	Wood Framed Floor	2x6 @ 16 in. O. C.	R-19	None / None	0.048	Floor Surface: Carpeted Floor Deck: Wood Siding/sheathing/decking Cavity / Frame: R-19 / 2x6 Ceiling Below Finish: Gypsum Board

BUILDING ENVELOPE - HERS VERIFICATION

01	02	03	04	05
Quality Insulation Installation (QII)	**High R-value Spray Foam Insulation**	**Building Envelope Air Leakage**	**CFM50**	**CFM50**
Not Required	Not Required	N/A	n/a	n/a

WATER HEATING SYSTEMS

01	02	03	04	05	06	07	08	09	10	11	12
Name	**System Type**	**Distribution Type**	**Water Heater Name**	**Number of Units**	**Solar Heating System**	**Compact Distribution**	**HERS Verification**	**Water Heater Name (#)**	**Status**	**Verified Existing Condition**	**Existing Water Heating System**
DHW ex	Domestic Hot Water (DHW)	Standard	Ex Tankless	1	n/a	None	n/a	Ex Tankless (1)	Existing	No	

WATER HEATERS

01	02	03	04	05	06	07	08	09	10	11	12	13	14	15
Name	**Heating Element Type**	**Tank Type**	**# of Units**	**Tank Vol. (gal)**	**Heating Efficiency Type**	**Efficiency**	**Rated Input Type**	**Input Rating or Pilot**	**Tank Insulation R-value (Int/Ext)**	**Standby Loss or Recovery Eff**	**1st Hr. Rating or Flow Rate**	**Tank Location**	**Status**	**Verified Existing Condition**
Ex Tankless	Gas	Small Instantaneous	1	0	EF	0.82	Btu/Hr	200000	0	70	n/a		Existing	No

WATER HEATING - HERS VERIFICATION

01	02	03	04	05	06	07
Name	**Pipe Insulation**	**Parallel Piping**	**Compact Distribution**	**Compact Distribution Type**	**Recirculation Control**	**Shower Drain Water Heat Recovery**
DHW ex - 1/1	Not Required	Not Required	Not Required	None	Not Required	Not Required

SPACE CONDITIONING SYSTEMS

01	02	03	04	05	06	07	08	09	10	11	12
Name	**System Type**	**Heating Unit Name**	**Heating Equipment Count**	**Cooling Unit Name**	**Cooling Equipment Count**	**Fan Name**	**Distribution Name**	**Required Thermostat Type**	**Status**	**Verified Existing Condition**	**Existing HVAC System**
HVAC ex	Heating and cooling system other	Ex Furnace	1	Ex Cooling	1	Fan ex	Ducts ex	n/a	Existing	No	

HVAC - HEATING UNIT TYPES

01	02	03	04	05
Name	**System Type**	**Number of Units**	**Heating Efficiency**	**Heating Unit Brand**
Ex Furnace	Central gas furnace	1	AFUE - 75	n/a

HVAC - COOLING UNIT TYPES

01	02	03	04	05	06	07	08	09
Name	**System Type**	**Number of Units**	**Efficiency Metric**	**Efficiency EER/EER2/CEER**	**Efficiency SEER/SEER2**	**Zonally Controlled**	**Mulit-speed Compressor**	**HERS Verification**
Ex Cooling	Central split AC	1	EER/SEER	7.06	8	Not Zonal	Single Speed	Ex Cooling-hers-cool

HVAC - DISTRIBUTION SYSTEMS

01	02	03	04	05	06	07	08	09	10	11	12	13	14	15	16
Name	**Type**	**Design Type**	**Duct Ins. R-value**		**Duct Location**		**Surface Area**		**Bypass Duct**	**Duct Leakage**	**HERS Verification**	**Status**	**Verified Existing Condition**	**Existing Distribution system**	**New Ducts >= 25 ft**
			Supply	**Return**	**Supply**	**Return**	**Supply**	**Return**							
Ducts ex	Unconditioned attic	Non-Verified	R-6	R-6	Attic	Attic	n/a	n/a	No Bypass Duct	Sealed and Tested	Ducts ex-hers-dist	Existing + New	No		Yes

HVAC DISTRIBUTION - HERS VERIFICATION

01	02	03	04	05	06	07	08	09
Name	**Duct Leakage Verification**	**Duct Leakage Target (%)**	**Verified Duct Location**	**Verified Duct Design**	**Buried Ducts**	**Deeply Buried Ducts**	**Low-leakage Air Handler**	**Low Leakage Ducts Entirely in Conditioned Space**
Ducts ex-hers-dist	Yes	10.0	Not Required	Not Required	Not Required	Credit not taken	Not Required	No

HVAC - FAN SYSTEMS

01	02	03	04
Name	**Type**	**Fan Power (Watts/CFM)**	**Name**
Fan ex	HVAC Fan	0.58	Fan ex-hers-fan

HVAC FAN SYSTEMS - HERS VERIFICATION

01	02	03
Name	**Verified Fan Watt Draw**	**Required Fan Efficacy (Watts/CFM)**
Fan ex-hers-fan	Not Required	0

INDOOR AIR QUALITY (IAQ) FANS

01	02	03	04	05	06	07	08	09
Dwelling Unit	**Airflow (CFM)**	**Fan Efficacy (W/CFM)**	**IAQ Fan Type**	**Includes Heat/Energy Recovery?**	**IAQ Recovery Effectiveness - SRE/ASRE**	**Includes Fault Indicator Display?**	**HERS Verification**	**Status**
SFam IAQVentRpt 1-1	160	0.3	Balanced	Yes	75 / 80	No	No	

HERS RATER VERIFICATION OF EXISTING CONDITIONS

INDOOR AIR QUALITY (IAQ) FANS - VERIFIED AND ALTERED

01	02	03	04	05	06	07
Name	**Airflow (CFM)**	**Fan Efficacy (W/CFM)**	**IAQ Fan Type**	**Includes Heat/Energy Recovery?**	**IAQ Recovery Effectiveness - SRE/IAQ Recovery Effectiveness - SRE**	**IAQ Recovery Effectiveness - ASRE/IAQ Recovery Effectiveness - ASRE**
Dwelling Unit 0/0	160	0.3	Balanced	Yes	75	80

DOCUMENTATION AUTHOR'S DECLARATION STATEMENT

I, I certify that this Certificate of Compliance documentation is accurate and complete.

Documentation Author Name: Igor Pichko	Documentation Author Signature: Igor Pichko
Company: Energy Consult LLC	Signature Date: 03/29/2024
Address: 1252 W 22nd St Unit #2	CEA/ HERS Certification Identification (If applicable): R19-14-30005
City/State/Zip: San Pedro, CA 90731	Phone: 4242477658

CABEC California Association of Building Energy Consultants CERTIFIED ENERGY ANALYST

RESPONSIBLE PERSON'S DECLARATION STATEMENT

I certify the following under penalty of perjury, under the laws of the State of California:

1. I am eligible under Division 3 of the Business and Professions Code to accept responsibility for the building design identified on this Certificate of Compliance.
2. I certify that the energy features and performance specifications identified on this Certificate of Compliance conform to the requirements of Title 24, Part 1 and Part 6 of the California Code of Regulations.
3. The building design features or system design features identified on this Certificate of Compliance are consistent with the information provided on other applicable compliance documents, worksheets, calculations, plans and specifications submitted to the enforcement agency for approval with this building permit application.

Responsible Designer Name: Mark Wheeler	Responsible Designer Signature: Mark Wheeler
Company: Mark Wheeler Residential Design	Date Signed: 03/29/2024
Address: 4918 E Atherton St	License:
City/State/Zip: Long Beach, CA 90815	Phone: (562)619-3990

Digitally signed by California Home Energy Efficiency Rating Services (CHEERS). This digital signature is provided in order to secure the content of this registered document, and in no way implies Registration Provider responsibility for the accuracy of the information.

3542 Venture addition
3542 Venture Dr, Huntington Beach, CA 92649

SHEET
T24-2

2022 Single-Family Residential Mandatory Requirements Summary

NOTE: Single-family residential buildings subject to the Energy Codes must comply with all applicable mandatory measures, regardless of the compliance approach used. Review the respective section for more information.
(04/2022)

Building Envelope:

§ 110.6(a)1:	**Air Leakage.** Manufactured fenestration, exterior doors, and exterior pet doors must limit air leakage to 0.3 CFM per square foot or less when tested per NFRC-400, ASTM E283, or AAMA/WDMA/CSA 101/I.S.2/A440-2011. *
§ 110.6(a)5:	**Labeling.** Fenestration products and exterior doors must have a label meeting the requirements of § 10-111(a).
§ 110.6(b):	**Field fabricated exterior doors and fenestration** products must use U-factors and solar heat gain coefficient (SHGC) values from Tables 110.6-A, 110.6-B, or JA4.5 for exterior doors. They must be caulked and/or weather-stripped. *
§ 110.7:	**Air Leakage.** All joints, penetrations, and other openings in the building envelope that are potential sources of air leakage must be caulked, gasketed, or weather stripped.
§ 110.8(a):	**Insulation Certification by Manufacturers.** Insulation must be certified by the Department of Consumer Affairs, Bureau of Household Goods and Services (BHGS).
§ 110.8(g):	**Insulation Requirements for Heated Slab Floors.** Heated slab floors must be insulated per the requirements of § 110.8(g).
§ 110.8(i):	**Roofing Products Solar Reflectance and Thermal Emittance**. The thermal emittance and aged solar reflectance values of the roofing material must meet the requirements of § 110.8(i) and be labeled per §10-113 when the installation of a cool roof is specified on the CF1R.
§ 110.8(j):	**Radiant Barrier**. When required, radiant barriers must have an emittance of 0.05 or less and be certified to the Department of Consumer Affairs.
§ 150.0(a):	**Roof Deck, Ceiling and Rafter Roof Insulation.** Roof decks in newly constructed attics in climate zones 4 and 8-16 area-weighted average U-factor not exceeding U-0.184. Ceiling and rafter roofs minimum R-22 insulation in wood-frame ceiling, or area-weighted average U-factor must not exceed 0.043. Rafter roof alterations minimum R-19 or area-weighted average U-factor of 0.054 or less. Attic access doors must have permanently attached insulation using adhesive or mechanical fasteners. The attic access must be gasketed to prevent air leakage. Insulation must be installed in direct contact with a roof or ceiling which is sealed to limit infiltration and exfiltration , as specified in § 110.7, including but not limited to placing insulation either above or below the roof deck or on top of a drywall ceiling. *
§ 150.0(b):	**Loose-fill Insulation.** Loose fill insulation must meet the manufacturer's required density for the labeled R-value.
§ 150.0(c):	**Wall Insulation**. Minimum R-13 insulation in 2x4 inch wood framing wall or have a U-factor of 0.102 or less, or R-20 in 2x6 inch wood framing or have a U-factor of 0.071 or less. Opaque non-framed assemblies must have an overall assembly U-factor not exceeding 0.102. Masonry walls must meet Tables 150.1-A or B. *
§ 150.0(d):	**Raised-floor Insulation**. Minimum R-19 insulation in raised wood framed floor or 0.037 maximum U-factor. *
§ 150.0(f):	**Slab Edge Insulation.** Slab edge insulation must meet all of the following: have a water absorption rate, for the insulation material alone without facings, no greater than 0.3 percent; have a water vapor permeance no greater than 2.0 perm per inch; be protected from physical damage and UV light deterioration; and, when installed as part of a heated slab floor, meet the requirements of § 110.8(g).
§ 150.0(g)1:	**Vapor Retarder.** In climate zones 1 through 16, the earth floor of unvented crawl space must be covered with a Class I or Class II vapor retarder. This requirement also applies to controlled ventilation crawl space for buildings complying with the exception to §150.0(d).
§ 150.0(g)2:	**Vapor Retarder.** In climate zones 14 and 16, a Class I or Class II vapor retarder must be installed on the conditioned space side of all insulation in all exterior walls, vented attics, and unvented attics with air-permeable insulation.
§ 150.0(q):	**Fenestration Products**. Fenestration, including skylights, separating conditioned space from unconditioned space or outdoors must have a maximum U-factor of 0.45; or area-weighted average U-factor of all fenestration must not exceed 0.45.

Fireplaces, Decorative Gas Appliances, and Gas Log:

§ 110.5(e)	**Pilot Light.** Continuously burning pilot lights are not allowed for indoor and outdoor fireplaces.
§ 150.0(e)1:	**Closable Doors.** Masonry or factory-built fireplaces must have a closable metal or glass door covering the entire opening of the firebox.
§ 150.0(e)2:	**Combustion Intake**. Masonry or factory-built fireplaces must have a combustion outside air intake, which is at least six square inches in area and is equipped with a readily accessible, operable, and tight-fitting damper or combustion-air control device.
§ 150.0(e)3:	**Flue Damper.** Masonry or factory-built fireplaces must have a flue damper with a readily accessible control. *

Space Conditioning, Water Heating, and Plumbing System:

§ 110.0-§ 110.3:	**Certification.** Heating, ventilation, and air conditioning (HVAC) equipment, water heaters, showerheads, faucets, and all other regulated appliances must be certified by the manufacturer to the California Energy Commission.
§ 110.2(a):	**HVAC Efficiency.** Equipment must meet the applicable efficiency requirements in Table 110.2-A through Table 110.2-N. *
§ 110.2(b):	**Controls for Heat Pumps with Supplementary Electric Resistance Heaters.** Heat pumps with supplementary electric resistance heaters must have controls that prevent supplementary heater operation when the heating load can be met by the heat pump alone; and in which the cut-on temperature for compression heating is higher than the cut-on temperature for supplementary heating, and the cut-off temperature for compression heating is higher than the cut-off temperature for supplementary heating.
§ 110.2(c):	**Thermostats.** All heating or cooling systems not controlled by a central energy management control system (EMCS) must have a setback thermostat. *
§ 110.3(c)3:	**Insulation.** Unfired service water heater storage tanks and solar water-heating backup tanks must have adequate insulation, or tank surface heat loss rating.
§ 110.3(c)6:	**Isolation Valves.** Instantaneous water heaters with an input rating greater than 6.8 kBtu per hour (2 kW) must have isolation valves with hose bibbs or other fittings on both cold and hot water lines to allow for flushing the water heater when the valves are closed.

5/6/22

2022 Single-Family Residential Mandatory Requirements Summary

§ 110.5:	**Pilot Lights.** Continuously burning pilot lights are prohibited for natural gas: fan-type central furnaces; household cooking appliances (except appliances without an electrical supply voltage connection with pilot lights that consume less than 150 Btu per hour); and pool and spa heaters. *
§ 150.0(h)1:	**Building Cooling and Heating Loads.** Heating and/or cooling loads are calculated in accordance with the ASHRAE Handbook, Equipment Volume, Applications Volume, and Fundamentals Volume; the SMACNA Residential Comfort System Installation Standards Manual; or the ACCA Manual J using design conditions specified in § 150.0(h)2.
§ 150.0(h)3A:	**Clearances.** Air conditioner and heat pump outdoor condensing units must have a clearance of at least five feet from the outlet of any dryer.
§ 150.0(h)3B:	**Liquid Line Drier.** Air conditioners and heat pump systems must be equipped with liquid line filter driers if required, as specified by the manufacturer's instructions.
§ 150.0(j)1:	**Water Piping, Solar Water-heating System Piping, and Space Conditioning System Line Insulation.** All domestic hot water piping must be insulated as specified in § 609.11 of the California Plumbing Code. *
§ 150.0(j)2:	**Insulation Protection.** Piping insulation must be protected from damage, including that due to sunlight, moisture, equipment maintenance, and wind as required by §120.3(b). Insulation exposed to weather must be weather retardant and protected from UV light (no adhesive tapes). Insulation covering chilled water piping and refrigerant suction piping located outside the conditioned space must include, or be protected by, a Class I or Class II vapor retarder. Pipe insulation buried below grade must be installed in a waterproof and non-crushable casing or sleeve.
§ 150.0(n)1:	**Gas or Propane Water Heating Systems.** Systems using gas or propane water heaters to serve individual dwelling units must designate a space at least 2.5' x 2.5' x 7' suitable for the future installation of a heat pump water heater, and meet electrical and plumbing requirements, based on the distance between this designated space and the water heater location; and a condensate drain no more than 2" higher than the base of the water heater
§ 150.0(n)3:	**Solar Water-heating Systems.** Solar water-heating systems and collectors must be certified and rated by the Solar Rating and Certification Corporation (SRCC), the International Association of Plumbing and Mechanical Officials, Research and Testing (IAPMO R&T), or by a listing agency that is approved by the executive director.

Ducts and Fans:

§ 110.8(d)3:	**Ducts.** Insulation installed on an existing space-conditioning duct must comply with § 604.0 of the California Mechanical Code (CMC). If a contractor installs the insulation, the contractor must certify to the customer, in writing, that the insulation meets this requirement.
§ 150.0(m)1:	**CMC Compliance.** All air-distribution system ducts and plenums must meet CMC §§ 601.0-605.0 and ANSI/SMACNA-006-2006 HVAC Duct Construction Standards Metal and Flexible 3rd Edition. Portions of supply-air and return-air ducts and plenums must be insulated to R-6.0 or higher; ducts located entirely in conditioned space as confirmed through field verification and diagnostic testing (RA3.1.4.3.8) do not require insulation. Connections of metal ducts and inner core of flexible ducts must be mechanically fastened. Openings must be sealed with mastic, tape, or other duct-closure system that meets the applicable UL requirements, or aerosol sealant that meets UL 723. The combination of mastic and either mesh or tape must be used to seal openings greater than ¼". If mastic or tape is used. Building cavities, air handler support platforms, and plenums designed and constructed with materials other than sealed sheet metal, duct board or flexible duct must not be used to convey conditioned air. Building cavities and support platforms may contain ducts; ducts installed in these spaces must not be compressed. *
§ 150.0(m)2:	**Factory-Fabricated Duct Systems.** Factory-fabricated duct systems must comply with applicable requirements for duct construction, connections, and closures; joints and seams of duct systems and their components must not be sealed with cloth back rubber adhesive duct tapes unless such tape is used in combination with mastic and draw bands.
§ 150.0(m)3:	**Field-Fabricated Duct Systems.** Field-fabricated duct systems must comply with applicable requirements for: pressure-sensitive tapes, mastics, sealants, and other requirements specified for duct construction.
§ 150.0(m)7:	**Backdraft Damper.** Fan systems that exchange air between the conditioned space and outdoors must have backdraft or automatic dampers.
§ 150.0(m)8:	**Gravity Ventilation Dampers.** Gravity ventilating systems serving conditioned space must have either automatic or readily accessible, manually operated dampers in all openings to the outside, except combustion inlet and outlet air openings and elevator shaft vents.
§ 150.0(m)9:	**Protection of Insulation.** Insulation must be protected from damage due tosunlight, moisture, equipment maintenance, and wind. Insulation exposed to weather must be suitable for outdoor service (e.g., protected by aluminum, sheet metal, painted canvas, or plastic cover). Cellular foam insulation must be protected as above or painted with a water retardant and solar radiation-resistant coating.
§ 150.0(m)10:	**Porous Inner Core Flex Duct.** Porous inner cores of flex ducts must have a non-porous layer or air barrier between the inner core and outer vapor barrier.
§ 150.0(m)11:	**Duct System Sealing and Leakage Test.** When space conditioning systems use forced air duct systems to supply conditioned air to an occupiable space, the ducts must be sealed and duct leakage tested, as confirmed through field verification and diagnostic testing, in accordance with Reference Residential Appendix RA3.1.
§ 150.0(m)12:	**Air Filtration.** Space conditioning systems with ducts exceeding 10 feet and the supply side of ventilation systems must have MERV 13 or equivalent filters. Filters for space conditioning systems must have a two inch depth or can be one inch if sized per Equation 150.0-A. Clean-filter pressure drop and labeling must meet the requirements in §150.0(m)12. Filters must be accessible for regular service. Filter racks or grilles must use gaskets, sealing, or other means to close gaps around the inserted filters to and prevents air from bypassing the filter. *

5/6/22

2022 Single-Family Residential Mandatory Requirements Summary

§ 150.0(m)13:	**Space Conditioning System Airflow Rate and Fan Efficacy.** Space conditioning systems that use ducts to supply cooling must have a hole for the placement of a static pressure probe, or a permanently installed static pressure probe in the supply plenum. Airflow must be ≥ 350 CFM per ton of nominal cooling capacity, and an air-handling unit fan efficacy ≤ 0.45 watts per CFM for gas furnace air handlers and ≤ 0.58 watts per CFM for all others. Small duct high velocity systems must provide an airflow ≥ 250 CFM per ton of nominal cooling capacity, and an air-handling unit fan efficacy ≤ 0.62 watts per CFM. Field verification testing is required in accordance with Reference Residential Appendix RA3.3. *

Ventilation and Indoor Air Quality:

§ 150.0(o)1:	**Requirements for Ventilation and Indoor Air Quality**. All dwelling units must meet the requirements of ASHRAE Standard 62.2, Ventilation and Acceptable Indoor Air Quality in Residential Buildings subject to the amendments specified in § 150.0(o)1. *
§ 150.0(o)1B:	**Central Fan Integrated (CFI) Ventilation Systems.** Continuous operation of CFI air handlers is not allowed to provide the whole-dwelling unit ventilation airflow required per §150.0(o)1C. A motorized damper(s) must be installed on the ventilation duct(s) that prevents all airflow through the space conditioning duct system when the damper(s) is closed andcontrolled per §150.0(o)1Biii&iv. CFI ventilation systems must have controls that track outdoor air ventilation run time, and either open or close the motorized damper(s) for compliance with §150.0(o)1C.
§ 150.0(o)1C:	**Whole-Dwelling Unit Mechanical Ventilation for Single-Family Detached and townhouses .** Single-family detached dwelling units, and attached dwelling units not sharing ceilings or floors with other dwelling units, occupiable spaces, public garages, or commercial spaces must have mechanical ventilation airflow specified in § 150.0(o)1Ci-iii.
§ 150.0(o)1G:	**Local Mechanical Exhaust.** Kitchens and bathrooms must have local mechanical exhaust; nonenclosed kitchens must have demand-controlled exhaust system meeting requirements of §150.0(o)1Giii,enclosed kitchens and bathrooms can use demand-controlled or continuous exhaust meeting §150.0(o)1Giii-iv. Airflow must be measured by the installer per §150.0(o)1Gv, and rated for sound per §150.0(o)1Gvi. *
§ 150.0(o)1H&I:	**Airflow Measurement and Sound Ratings of Whole-Dwelling Unit Ventilation Systems.** The airflow required per § 150.0(o)1C must be measured by using a flow hood, flow grid, or other airflow measuring device at the fan's inlet or outlet terminals/grilles per Reference Residential Appendix RA3.7. Whole-Dwelling unit ventilation systems must be rated for sound per ASHRAE 62.2 §7.2 at no less than the minimum airflow rate required by §150.0(o)1C.
§ 150.0(o)2:	**Field Verification and Diagnostic Testing.** Whole-Dwelling Unit ventilation airflow, vented range hood airflow and sound rating, and HRV and ERV fan efficacy must be verified in accordance with Reference Residential Appendix RA3.7. Vented range hoods must be verified per Reference Residential Appendix RA3.7.4.3 to confirm if it is rated by HVI or AHAM to comply with the airflow rates and sound requirements per §150.0(o)1G

Pool and Spa Systems and Equipment:

§ 110.4(a):	**Certification by Manufacturers**. Any pool or spa heating system or equipment must be certified to have all of the following: compliance with the Appliance Efficiency Regulations and listing in MAEDbS; an on-off switch mounted outside of the heater that allows shutting off the heater without adjusting the thermostat setting; a permanent weatherproof plate or card with operating instructions; and must not use electric resistance heating. *
§ 110.4(b)1:	**Piping.** Any pool or spa heating system or equipment must be installed with at least 36 inches of pipe between the filter and the heater, or dedicated suction and return lines, or built-in or built-up connections to allow for future solar heating.
§ 110.4(b)2:	**Covers.** Outdoor pools or spas that have a heat pump or gas heater must have a cover.
§ 110.4(b)3:	**Directional Inlets and Time Switches for Pools.** Pools must have directional inlets that adequately mix the pool water, and a time switch that will allow all pumps to be set or programmed to run only during off-peak electric demand periods.
§ 110.5:	**Pilot Light.** Natural gas pool and spa heaters must not have a continuously burning pilot light.
§ 150.0(p):	**Pool Systems and Equipment Installation.** Residential pool systems or equipment must meet the specified requirements for pump sizing, flow rate, piping, filters, and valves. *

Lighting:

§ 110.9:	**Lighting Controls and Components.** All lighting control devices and systems, ballasts, and luminaires must meet the applicable requirements of § 110.9. *
§ 150.0(k)1A:	**Luminaire Efficacy.** All installed luminaires must meet the requirements in Table 150.0-A, except lighting integral to exhaust fans, kitchen range hoods, bath vanity mirrors, and garage door openers; navigation lighting less than 5 watts; and lighting internal to drawers, cabinets, and linen closets with an efficacy of at least 45 lumens per watt.
§ 150.0(k)1B:	**Screw based luminaires.** Screw based luminaires must contain lamps that comply with Reference Joint Appendix JA8. *
§ 150.0(k)1C:	**Recessed Downlight Luminaires in Ceilings.** Luminaires recessed into ceilings must not contain screw based sockets, must be airtight, and must be sealed with a gasket or caulk. California Electrical Code § 410.116 must also be met.
§ 150.0(k)1D:	**Light Sources in Enclosed or Recessed Luminaires.** Lamps and other separable light sources that are not compliant with the JA8 elevated temperature requirements, including marking requirements, must not be installed in enclosed or recessed luminaires.
§ 150.0(k)1E:	**Blank Electrical Boxes.** The number of electrical boxes that are more than five feet above the finished floor and do not contain a luminaire or other device shall be no more than the number of bedrooms. These boxes must be served by a dimmer, vacancy sensor control, low voltage wiring, or fan speed control.
§ 150.0(k)1F:	**Lighting Integral to Exhaust Fans.** Lighting integral to exhaust fans (except when installed by the manufacturer in kitchen exhaust hoods) must meet the applicable requirements of § 150.0(k). *

5/6/22

2022 Single-Family Residential Mandatory Requirements Summary

§ 150.0(k)1G:	**Screw based luminaires.** Screw based luminaires must contain lamps that comply with Reference Joint Appendix JA8. *
§ 150.0(k)1H:	**Light Sources in Enclosed or Recessed Luminaires.** Lamps and other separable light sources that are not compliant with the JA8 elevated temperature requirements, including marking requirements, must not be installed in enclosed or recessed luminaires.
§ 150.0(k)1I:	**Light Sources in Drawers, Cabinets, and Linen Closets.** Light sources internal to drawers, cabinetry or linen closets are not required to comply with Table 150.0-A or be controlled by vacancy sensors provided that they are rated to consume no more than 5 watts of power, emit no more than 150 lumens, and are equipped with controls that automatically turn the lighting off when the drawer, cabinet or linen closet is closed.
§ 150.0(k)2A:	**Interior Switches and Controls.** All forward phase cut dimmers used with LED light sources must comply with NEMA SSL 7A.
§ 150.0(k)2B:	**Interior Switches and Controls.** Exhaust fans must be controlled separately from lighting systems. *
§ 150.0(k)2A:	**Accessible Controls.** Lighting must have readily accessible wall-mounted controls that allow the lighting to be manually turned on and off. *
§ 150.0(k)2B:	**Multiple Controls.** Controls must not bypass a dimmer, occupant sensor, or vacancy sensor function if the dimmer or sensor is installed to comply with § 150.0(k).
§ 150.0(k)2C:	**Mandatory Requirements.** Lighting controls must comply with the applicable requirements of § 110.9.
§ 150.0(k)2D:	**Energy Management Control Systems.** An energy management control system (EMCS) may be used to comply with dimming, occupancy, and control requirements if it provides the functionality of the specified control per § 110.9 and the physical controls specified in § 150.0(k)2A.
§ 150.0(k)2E:	**Automatic Shutoff Controls.** In bathrooms, garages, laundry rooms, utility rooms and walk-in closets, at least one installed luminaire must be controlled by an occupancy or vacancy sensor providing automatic-off functionality. Lighting inside drawers and cabinets with opaque fronts or doors must have controls that turn the light off when the drawer or door is closed.
§ 150.0(k)2F:	**Dimmers.** Lighting in habitable spaces (e.g., living rooms, dining rooms, kitchens, and bedrooms) must have readily accessible wall-mounted dimming controls that allow the lighting to be manually adjusted up and down. Forward phase cut dimmers controlling LED light sources in these spaces must comply with NEMA SSL 7A.
§ 150.0(k)2K:	**Independent controls.** Integrated lighting of exhaust fans shall be controlled independently from the fans. Lighting under cabinets or shelves, lighting in display cabinets, and switched outlets must be controlled separately from ceiling-installed lighting.
§ 150.0(k)3A:	**Residential Outdoor Lighting.** For single-family residential buildings, outdoor lighting permanently mounted to a residential building, or to other buildings on the same lot, must have a manual on/off switch and either a photocell and motion sensor or automatic time switch control) or an astronomical time clock. An energy management control system that provides the specified control functionality and meets all applicable requirements may be used to meet these requirements.
§ 150.0(k)4:	**Internally illuminated address signs.** Internally illuminated address signs must either comply with § 140.8 or consume no more than 5 watts of power.
§ 150.0(k)5:	**Residential Garages for Eight or More Vehicles.** Lighting for residential parking garages for eight or more vehicles must comply with the applicable requirements for nonresidential garages in §§ 110.9, 130.0, 130.1, 130.4, 140.6, and 141.0.

Solar Readiness:

§ 110.10(a)1:	**Single-family Residences.** Single-family residences located in subdivisions with 10 or more single-family residences and where the application for a tentative subdivision map for the residences has been deemed complete and approved by the enforcement agency, which do not have a photovoltaic system installed, must comply with the requirements of § 110.10(b)-(e).
§110.10(b)1A:	**Minimum Solar Zone Area.** The solar zone must have a minimum total area as described below. The solar zone must comply with access, pathway, smoke ventilation, and spacing requirements as specified in Title 24, Part 9 or other parts of Title 24 or in any requirements adopted by a local jurisdiction. The solar zone total area must be comprised of areas that have no dimension less than 5 feet and are no less than 80 square feet each for buildings with roof areas less than or equal to 10,000 square feet or no less than 160 square feet each for buildings with roof areas greater than 10,000 square feet. For single-family residences, the solar zone must be located on the roof or overhang of the building and have a total area no less than 250 square feet. *
§ 110.10(b)2:	**Azimuth.** All sections of the solar zone located on steep-sloped roofs must have an azimuth between 90-300* of true north.
§ 110.10(b)3A:	**Shading.** The solar zone must not contain any obstructions, including but not limited to: vents, chimneys, architectural features, and roof mounted equipment. *
§ 110.10(b)3B:	**Shading**. Any obstruction located on the roof or any other part of the building that projects above a solar zone must be located at least twice the horizontal distance of the height difference between the highest point of the obstruction and the horizontal projection of the nearest point of the solar zone, measured in the vertical plane. *
§ 110.10(b)4:	**Structural Design Loads on Construction Documents.** For areas of the roof designated as a solar zone, the structural design loads for roof dead load and roof live load must be clearly indicated on the construction documents.
§ 110.10(c):	**Interconnection Pathways.** The construction documents must indicate: a location reserved for inverters and metering equipment and a pathway reserved for routing of conduit from the solar zone to the point of interconnection with the electrical service; and for single-family residences and central water-heating systems, a pathway reserved for routing plumbing from the solar zone to the water-heating system.
§ 110.10(d):	**Documentation**. A copy of the construction documents or a comparable document indicating the information from § 110.10(b)-(c) must be provided to the occupant.
§ 110.10(e)1:	**Main Electrical Service Panel.** The main electrical service panel must have a minimum busbar rating of 200 amps.
§ 110.10(e)2:	**Main Electrical Service Panel.** The main electrical service panel must have a reserved space to allow for the installation of a double pole circuit breaker for a future solar electric installation. The reserved space must be permanently marked as "For Future Solar Electric."

Electric and Energy Storage Ready:

5/6/22

2022 Single-Family Residential Mandatory Requirements Summary

§ 150.0(s)	**Energy Storage System (ESS) Ready**. All single-family residences must meet all of the following: Either ESS-ready interconnection equipment with backed up capacity of 60 amps or more and four or more ESS supplied branch circuits, or a dedicated raceway from the main service to a subpanel that supplies the branch circuits in § 150.0(s); at least four branch circuits must be identified and have their source collocated at a single panelboard suitable to be supplied by the ESS, with one circuit supplying the refrigerator, one lighting circuit near the primary exit, and one circuit supplying a sleeping room receptacle outlet; main panelboard must have a minimum busbar rating of 225 amps; sufficient space must be reserved to allow future installation of a system isolation equipment/transfer switch within 3' of the main panelboard, with raceways installed between the panelboard and the switch location to allow the connection of backup power source.
§ 150.0(t)	**Heat Pump Space Heater Ready.** Systems using gas or propane furnaces to serve individual dwelling units must include: A dedicated unobstructed 240V branch circuit wiring installed within 3' of the furnace with circuit conductors rated at least 30 amps with the blank cover identified as "240V ready;" and a reserved main electrical service panel space to allow for the installation of a double pole circuit breaker permanently marked as "For Future 240V use."
§ 150.0(u)	**Electric Cooktop Ready.** Systems using gas or propane cooktop to serve individual dwelling units must include: A dedicated unobstructed 240V branch circuit wiring installed within 3' of the cooktop with circuit conductors rated at least 50 amps with the blank cover identified as "240V ready;" and a reserved main electrical service panel space to allow for the installation of a double pole circuit breaker permanently marked as "For Future 240V use."
§ 150.0(v)	**Electric Clothes Dryer Ready.** Clothes dryer locations with gas or propane plumbing to serve individual dwelling units must include: A dedicated unobstructed 240V branch circuit wiring installed within 3' of the dryer location with circuit conductors rated at least 30 amps with the blank cover identified as "240V ready;" and a reserved main electrical service panel space to allow for the installation of a double pole circuit breaker permanently marked as "For Future 240V use."

*Exceptions may apply.

5/6/22

2022 Low-Rise Residential Mandatory Measures Summary

SHEET

T24-M

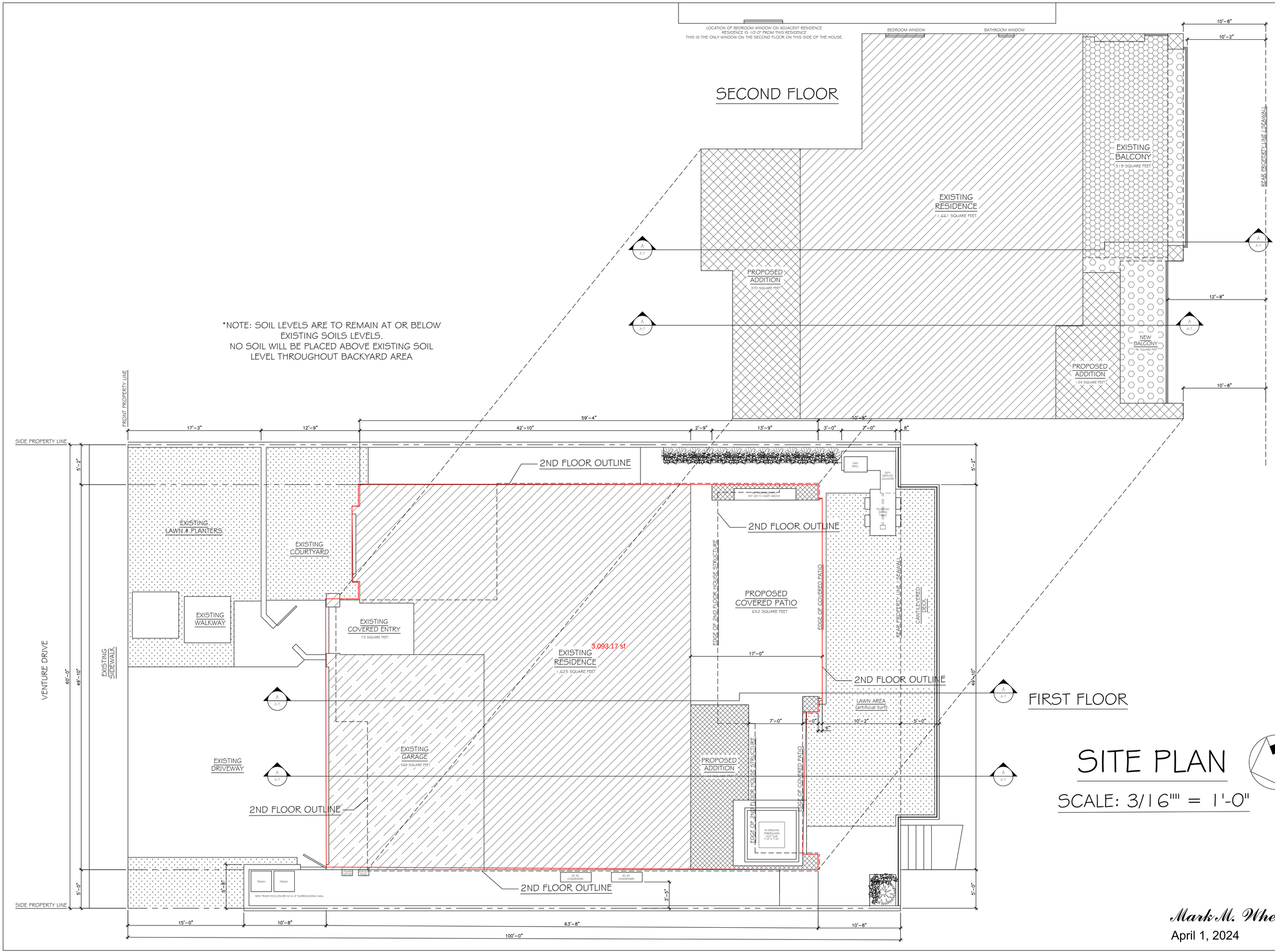

Mark M. Wheeler
April 1, 2024

REVISIONS	–
	–
–	–
–	–

The Cirks Residence

3542 VENTURE DRIVE ~ HUNTINGTON HARBOUR ~ HUNTINGTON BEACH, CA 92648

mark wheeler
RESIDENTIAL DESIGN
325 ROYCROFT AVENUE
LONG BEACH, CA. 90814
562-619-3965
562-494-3960
562-684-0570

DATE: 4-1-24
SCALE: AS NOTED
DRAWN: MMW
JOB: A-789
SHEET: A-1.0
OF – SHEETS

REVISIONS | –

The Cirks Residence

3542 VENTURE DRIVE ~ HUNTINGTON HARBOUR ~ HUNTINGTON BEACH, CA 92648

325 ROYCROFT AVENUE
LONG BEACH, CA. 90814
562-856-5665
562-619-3990
562-684-0570

mark wheeler
RESIDENTIAL DESIGN

DATE: 4-1-24
SCALE: AS NOTED
DRAWN: MMW
JOB: A-789
SHEET: A-1.1
OF – SHEETS

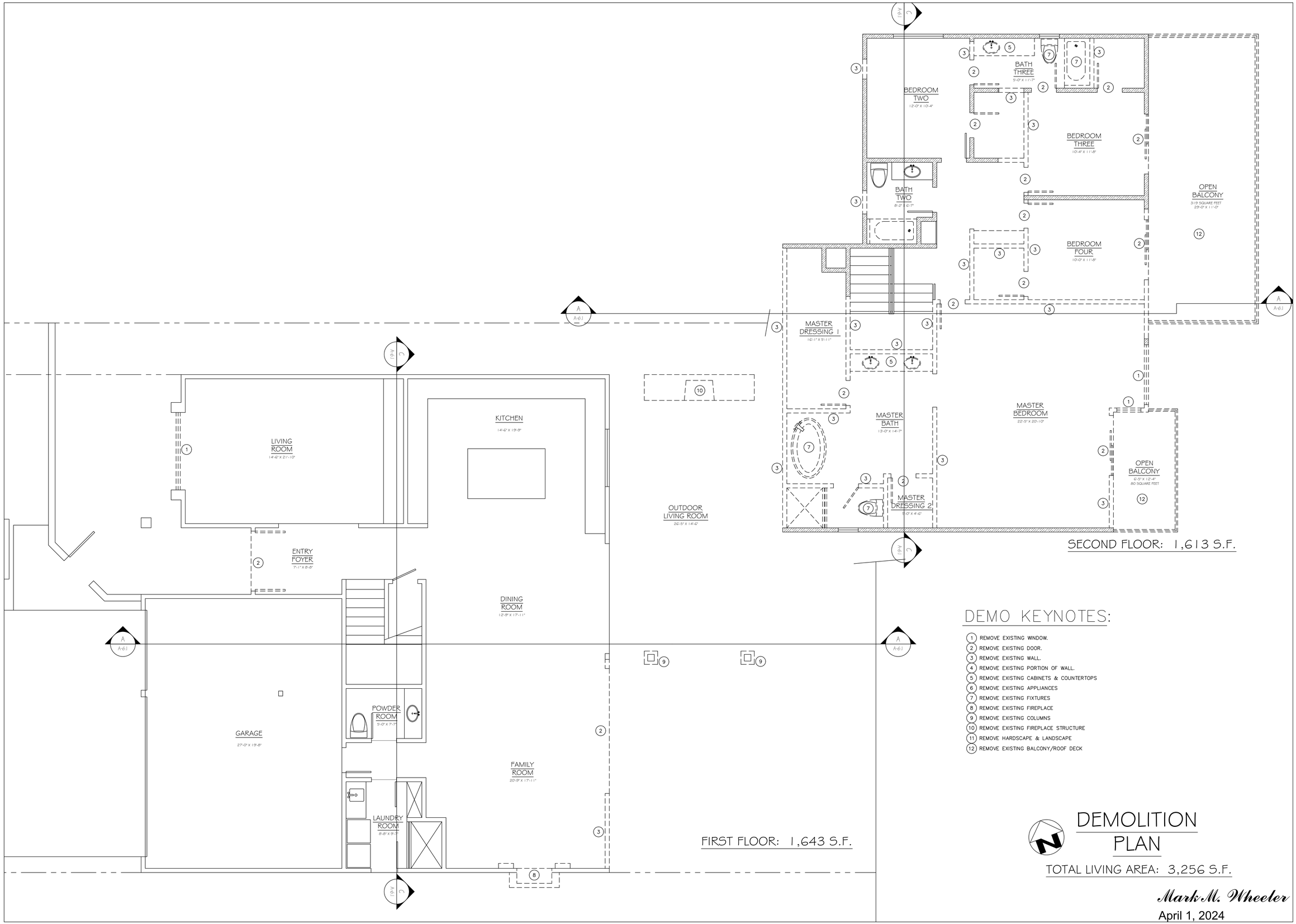

DEMO KEYNOTES:

1. REMOVE EXISTING WINDOW.
2. REMOVE EXISTING DOOR.
3. REMOVE EXISTING WALL.
4. REMOVE EXISTING PORTION OF WALL.
5. REMOVE EXISTING CABINETS & COUNTERTOPS
6. REMOVE EXISTING APPLIANCES
7. REMOVE EXISTING FIXTURES
8. REMOVE EXISTING FIREPLACE
9. REMOVE EXISTING COLUMNS
10. REMOVE EXISTING FIREPLACE STRUCTURE
11. REMOVE HARDSCAPE & LANDSCAPE
12. REMOVE EXISTING BALCONY/ROOF DECK

DEMOLITION PLAN

TOTAL LIVING AREA: 3,256 S.F.

Mark M. Wheeler

April 1, 2024

REVISIONS	–
	–
–	–
–	–

The Cirks Residence

3542 VENTURE DRIVE ~ HUNTINGTON HARBOUR ~ HUNTINGTON BEACH, CA 92648

mark wheeler
RESIDENTIAL DESIGN
325 ROYCROFT AVENUE
LONG BEACH, CA. 90814
562-819-5545
562-619-3990
562-684-0570

DATE: 4-1-24

SCALE: AS NOTED

DRAWN: MMW

JOB: A-789

SHEET: A-2.0

OF – SHEETS

GENERAL NOTES

A. EXTERIOR WINDOW/DOOR GLAZING SHALL BE DUAL GLAZED, LOW–E, CLEAR GLASS, AT ALL LOCATIONS, OWNER TO CHOSE COLOR AND MANUFACTURER.
- WINDOW U–FACTOR 0.34
- WINDOW SHGC 0.28
- RADIANT BARRIER NOT REQUIRED

B. TEMPERED GLASS AT GLAZED DOORS, SHOWER DOORS, SIDE LITES, & WITHIN 18" OF FIN. FLR. & 40" OF A LOCKING DEVICE IN CONFORMANCE TO CRC R308.4

C. R–30 FOR ROOF INSULATION
R–13 FOR WALLS
SLAB FOUNDATION

D. REPAIR ALL TRANSITIONAL AREAS BETWEEN EXISTING AND NEW WORK DUE TO DEMOLITION.

E. DIMENSIONS TO FACE OF FINISH WALL AT ALL WALLS.

F. ALL NEW EXTERIOR WALL/CEILING SURFACES SHALL BE PAINTED WITH SCHEME PER OWNER'S INSTRUCTION. SCRAPE AND REMOVE ALL EXISTING (NEXT TO NEW WORK) LOOSE PAINT PER MANUFACTURER'S SPEC. AND PREPARE SURFACES FOR NEW PRIMER & PAINT.

G. CABINETRY: ALL BUILT–IN CABINETRY TO BE DONE BY CABINET SUB–CONTRACTORS, OWNER TO CHOSE WHO DOES WORK.

H. THERE IS NO SOIL REPORT FOR THIS PROJECT, USE 1000 PSF SOIL BEARING.

I. ALL DOORS AND WINDOWS WILL BE NEW WHERE INDICATED ON THE DWGS.

J. REGARDING DEMOLITION, CAP ALL EXISTING UTILITIES & PREPARE FOR NEW WORK AS REQUIRED.

K. REMOVE, DEMOLISH AND REROUTE EXISTING LANDSCAPE SPRINKLER SYSTEM THAT OBSTRUCTS NEW WORK. MAINTAIN AN OPERATIONAL LANDSCAPE IRRIGATION SYSTEM.

L. ALL NEW WOOD DOOR/WINDOW TRIMS SHALL BE MADE OF MDF OR WOOD. PROVIDE WOOD AT ALL INTERIOR LOCATIONS

N. DRYWALL SHALL BE 5/8" THICK, MOISTURE RESISTANT AT WET LOCATIONS. FINISH SMOOTH TO MATCH EXISTING TEXTURE.

O. THE CONTRACTOR IS RESPONSIBLE TO COMPLY WITH ALL GOVERNING BLDG. CODES AND CITY ORDINANCES.

P. PROVIDE ATTIC VENTILATION PER 2016 CRC R608 VIA VENTS.

Q. PATCH, RESTORE, AND REFINISH ALL AREAS DAMAGED BY THE CONSTRUCTION WORK AND DEMOLITION.

R. ALL NEW DOORS TO BE SOLID OR HOLLOW CORE W SOLID WOOD JAMB FRAMES, PER HOMEOWNERS' INSTRUCTION.

S. ALL FINISHES TO HAVE OWNERS APPROVAL PRIOR TO COMPLETION OF PROJECT.

T. THE MOISTURE CONTENT OF CONSTRUCTION MATERIALS AND INSULATION SHALL BE VERIFIED PRIOR TO APPROVAL TO ENCLOSE WALL AND FLOOR CAVITIES WITH DRYWALL OR OTHER FINISH SURFACES. (4.505.3.CGBSC)

WALL TYPES

1–LAYERS 5/8" GYPSUM BOARD OVER 2x4 (UNLESS OTHERWISE NOTED) STUDS AT 16" O.C. AT BOTH SIDES. AT INTERIOR WALLS & CEILINGS, WATER–RESISTANT TYPE AT WET LOCATIONS. FINISH SHALL MATCH EXISTING, PAINTED AND ALL OUTSIDE CORNERS TO BE METAL 90 DEGREE EDGES. EXTERIOR PLASTER AT EXTERIOR WALLS 7/8" THICK WITH BUILDING PAPER..

EXISTING WALLS– PATCH AND REPAIR AS NEEDED TO MATCH EXISTING FINISHED SURFACES.

1–HOUR RATED WALL. 1–LAYERS 5/8" GYP. BD. TYPE 'X' OVER 2x4 (UNLESS OTHERWISE NOTED) STUDS AT 16" O.C. AT BOTH SIDES. AT INTERIOR WALLS & CEILINGS, FINISH SHALL MATCH EXISTING, PAINTED AND ALL OUTSIDE CORNERS TO BE METAL 90 DEGREE EDGES. EXTERIOR PLASTER AT EXTERIOR WALLS 7/8" THICK WITH BUILDING PAPER.

BLDG. DEPT. NOTES

A. OCCUPANCY GROUP: R3–U

B. TYPE OF CONSTRUCTION: VB

C. APPLICABLE CODES: 2020 CBC, 2020 CPC, 2020 CMC, 2020 CEC EDITIONS UNDER WHICH THIS PROJECT IS TO BE APPROVED.

D. PROVIDE 1" CLEAR AIR SPACE BETWEEN INSULATION & ROOF SHEATHING TO ENSURE FREE AIRFLOW IN THE ATTIC SPACE.

E ALL NEW LOW–RISE RESIDENTIAL BUILDINGS AND ADDITION OVER 1000 S.F. MUST HAVE A WHOLE HOUSE VENTILATION SYSTEM THAT PROVIDES A CALCULATED MINIMUM AMOUNT OF OUTDOOR AIR BY USING EITHER A CONTINUOUSLY RUNNING BATHROOM FAN OR A SUPPLY OR RETURN AIR VENTILATION THRU A CENTRAL HVAC SYSTEM. THE MINIMUM VENTILATION VOLUME MUST BE A MINIMUM OF 1 C.F.M FOR EACH 100 S.F. OF FLOOR AREA (53 C.F.M.) PLUS 7.5 C.F.M. FOR EACH OCCUPANT. THE NUMBER OF OCCUPANTS IS DETERMINED BY MULTIPLYING THE NUMBER OF BEDROOMS (5) AND THEN ADDING ONE (TOTAL: 45) (TOTAL C.F.M. REQUIRED: 98) (ASHRAE 62.2)

GENERAL NOTES

1. FINISH GARAGE WALL AND CEILING W/GYPSUM BOARD REFERENCE PLANS AND SECTIONS FOR TYPE AND THICKNESS.
2. GLASS SHOWER ENCLOSURES AND GLASS ENCLSURES IN ALL BATHROOMS SHALL BE TEMPERED.
3. THE DRYER'S MOISTURE EXHAUST DUCT SHALL NOT EXCEED A TOTAL COMBINED HORIZONTIAL AND VERTICAL LENGTH OF 14'–0" INCLUDING TWO 90–DEGREE ELBOWS PER CMC 504.3.2.2. EXCEPTION USE 5" DRYER VENT DUCT MAX LENGHT = 21'–0"

PLUMBING NOTES

NOTE: MAXIMUM FLUSH VALUMES AND FLOW RATES.
WATER CLOSET: 1.28 GALLONS PER FLUSH
SHOWERHEADS: 2.0 GALLONS PER MINUTE.
FAUCETS: 1.2 GALLONS (LAV) / 1.8 GALLONS (SINK) PER MINUTE

NOTE: EXISTING PLUMBING FIXTURES SHALL BE REPLACED IN COMPLIANCE WITH SB407.

REFER TO SHEET A–3.1 FOR KEYNOTES

DOOR SCHEDULE

DOOR MARK	DOOR SIZE WIDTH	HEIGHT	THK.	DOOR TYPE	CONST.	FINISH	FRAME MAT.	FINISH	RATED ASSEMEBLY	MAXIMUM U–FACTOR	SOLAR HEAT–GAIN COEFFEICENT		THRESH.	HARDWARE	REMARK
1	3'–6" ENTRY	8'–0"	1 3/4	WD	SC	P–	WD	P–	–	.35	.35	–/–	–/–	–	CUSTOM ENTRY DOOR W/GLASS INSET––PER OWNER
2	7'–9" FOLDING	6'–8"	2 1/4	WD	SC	P–	WD	P–	–	.35	.35	–/–	–/–	–	LA CANTINA OR SIMILAR FOLDING GLASS DOORS––TEMPERED
3	8'–0" GARAGE	7'–0"	2	GARAGE	WOOD	P–	WD	P–	–	–/–	–/–	–/–	–/–	–	SINGLE WIDE GARAGE DOOR––STYLE TBD
4	16'–0" GARAGE	7'–0"	2	GARAGE	WOOD	P–	WD	P–	–	–/–	–/–	–/–	–/–	–	DOUBLE WIDE GARAGE DOOR––STYLE TBD
5	2'–6" (E) FIRE	6'–8"	1 3/4	WD	SC	P–	WD	P–	–	–/–	–/–	–/–	–/–	–	(E) 20–MIN FIRE DOOR, SELF–CLOSING, SELF–LATCHING
6	2'–6" SGL	6'–8"	1 3/4	WD	SC	P–	WD	P–	–	–/–	–/–	–/–	–/–	–	SOLID INTERIOR DOOR
7	2'–8" (E) EXT	6'–8"	1 3/4	WD	SC	P–	WD	P–	–	–/–	–/–	–/–	–/–	–	EXISTING––SOLID EXTERIOR DOOR
8	11'–0" FOLDING	8'–0"	2	WD	SC	P–	WD	P–	–	.35	.35	–/–	–/–	–	LA CANTINA OR SIMILAR FOLDING GLASS DOORS
9	11'–0" FOLDING	8'–0"	2	WD	SC	P–	WD	P–	–	.35	.35	–/–	–/–	–	LA CANTINA OR SIMILAR FOLDING GLASS DOORS
10	2'–2" SGL	6'–8"	1 3/4	WD	SC	P–	WD	P–	–	–/–	–/–	–/–	–/–	–	SOLID INTERIOR DOOR
11	3'–6" FRENCH	6'–8"	1 3/4	WD	SC	P–	WD	P–	–	––	––	–/–	–/–	–	DOUBLE INTERIOR FRENCH DOORS––TEMPERED
12	5'–0" DOUBLE	6'–8"	1 3/4	WD	SC	P–	WD	P–	–	––	––	–/–	–/–	–	DOUBLE INTERIOR DOORS
13	2'–4" SGL	6'–8"	1 3/4	WD	SC	P–	WD	P–	–	–/–	–/–	–/–	–/–	–	SOLID INTERIOR DOOR
14	5'–0" CLOSET	6'–8"	1 3/4	WD	SC	P–	WD	P–	–	–/–	–/–	–/–	–/–	–	SLIDING CLOSET DOORS––TO MATCH INT. DOORS
15	5'–0" DOUBLE	6'–8"	1 3/4	WD	SC	P–	WD	P–	–	––	––	–/–	–/–	–	DOUBLE INTERIOR DOORS
16	6'–0" CLOSET	6'–8"	1 3/4	WD	SC	P–	WD	P–	–	–/–	–/–	–/–	–/–	–	SLIDING CLOSET DOORS––TO MATCH INT. DOORS
17	6'–0" SLIDER	6'–8"	1 3/4	WD	SC	P–	WD	P–	–	.35	.35	–/–	–/–	–	SLIDING GLASS DOOR––TEMPERED
18	13'–0" FOLDING	6'–8"	2	WD	SC	P–	WD	P–	–	.35	.35	–/–	–/–	–	4 PANEL FOLDING GLASS DOORS––TEMPERED
19	12'–0" POCKET	6'–8"	1 3/4	WD	SC	P–	WD	P–	–	.35	.35	–/–	–/–	–	3 PANEL POCKETING GLASS DOORS––TEMPERED
20	5'–0" DOUBLE	6'–8"	1 3/4	WD	SC	P–	WD	P–	–	––	––	–/–	–/–	–	DOUBLE EXTERIOR DOORS

WINDOW SCHEDULE

REMARK: ANDERSON OR KOLBE clad windows or equiv. Color: Black. Ext. finish: TBD. Interior finish TBD by owner. Ext. casing: brickmould w/ projected sill. Int. casing to be completed as a part of interior millwork, per interior elevations.

WINDOW MARK	WINDOW SIZE WIDTH	HEIGHT	THK.	WINDOW TYPE	FINISH	FRAME MAT.	FINISH	RATED ASSEMEBLY	MAXIMUM U–FACTOR	SOLAR HEAT–GAIN COEFFEICENT			REMARK
A	2'–0"	6'–4"	–	FIXED	P–	CLAD	P–	–	.34	.28	–/–	–	FIXED WINDOW––TEMPERED
B	5'–9"	5'–0"	–	TPL FOLD	P–	CLAD	P–	–	.34	.28	–/–	–	3 PANEL FOLDING WINDOWS––TEMPERED
C	6'–0"	8'–0"	–	FIXED	P–	CLAD	P–	–	.34	.28	–/–	–	FIXED WINDOW––TEMPERED
D	1'–6"	6'–6"	–	FIXED	P–	CLAD	P–	–	.34	.28	–/–	–	FIXED WINDOW––TEMPERED
E	7'–0"	6'–6"	–	SLIDER	P–	CLAD	P–	–	.34	.28	–/–	–	SLIDER––TEMPERED
F	5'–0"	2'–0"	–	AWNING	P–	CLAD	P–	–	.34	.28	–/–	–	AWNING WINDOW
G	7'–6"	4'–8"	–	TRP CASE	P–	CLAD	P–	–	.34	.28	–/–	–	TRIPLE CASEMENT––X–O–X TEMPERED
H	7'–6"	1'–6"	–	TRP CASE	P–	CLAD	P–	–	.34	.28	–/–	–	TRIPLE CASEMENT––O–O–O TEMPERED
J	2'–0"	3'–6"	–	SGL CASE	P–	CLAD	P–	–	.34	.28	–/–	–	SINGLE CASEMENT––TEMPERED
K	5'–0"	4'–8"	–	DBL CASE	P–	CLAD	P–	–	.34	.28	–/–	–	DOUBLE CASEMENT––TEMPERED––EGRESS
J	2'–0"	3'–6"	–	SGL CASE	P–	CLAD	P–	–	.34	.28	–/–	–	SINGLE CASEMENT––TEMPERED
M	3'–6"	6'–8"	–	FIXED	P–	CLAD	P–	–	.34	.28	–/–	–	FIXED WINDOW––TEMPERED
N	2'–0"	3'–6"	–	SGL CASE	P–	CLAD	P–	–	.34	.28	–/–	–	SINGLE CASEMENT––TEMPERED
O	2'–0"	3'–6"	–	SGL CASE	P–	CLAD	P–	–	.34	.28	–/–	–	SINGLE CASEMENT––TEMPERED
P	3'–0"	3'–0"	–	SKYLIGHT	P–	CLAD	P–	–	.34	.28	–/–	–	VELUX FCM 3636 FIXED SKYLIGHT
Q	4'–10"	6'–0"	–	SKYLIGHT	P–	CLAD	P–	–	.34	.28	–/–	–	VELUX FCM 4672 FIXED SKYLIGHT
R	1'–4"	4'–0"	–	SKYLIGHT	P–	CLAD	P–	–	.34	.28	–/–	–	VELUX FCM 1648 FIXED SKYLIGHT

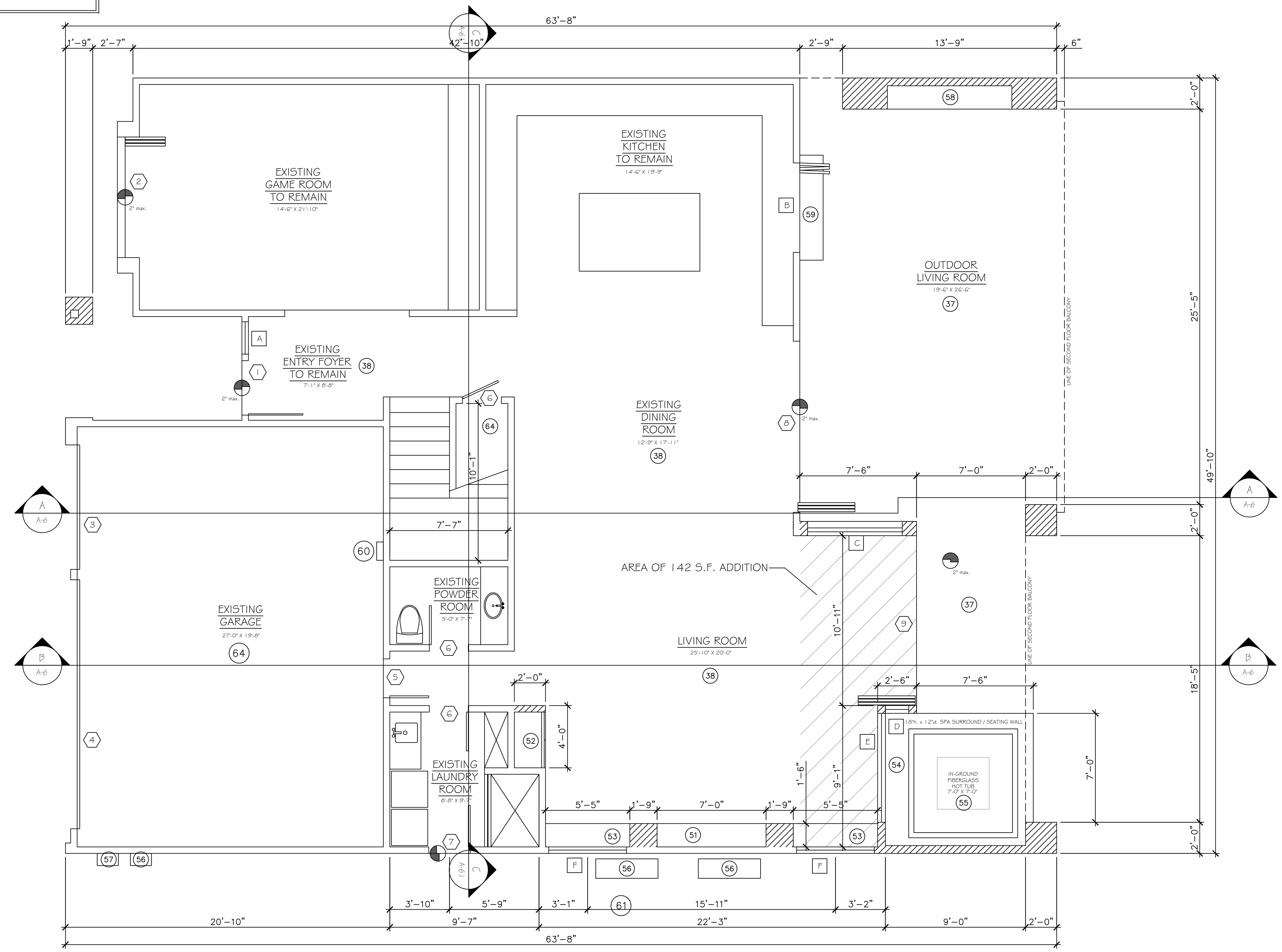

Mark M. Wheeler
April 1, 2024

FLOOR PLAN--FIRST FLOOR

REVISIONS	–
	–
–	–
–	–

The Cirks Residence
3542 VENTURE DRIVE ~ HUNTINGTON HARBOUR ~ HUNTINGTON BEACH, CA 92648

mark wheeler
RESIDENTIAL DESIGN
325 ROYCROFT AVENUE
LONG BEACH, CA. 90814
562-856-5665
562-619-3990
562-684-0570

DATE: 4–1–24
SCALE: AS NOTED
DRAWN:MMW
JOB: A–788
SHEET: A-3.0
OF – SHEETS

KEYNOTES

1. REMOVE EXISTING WINDOW & TRIMS & PATCH,REPAIR/REPLACE BUILDING MATERIALS WITH 2x4 WOOD FRAMING AND NEW FINISHES MATCH EXISTING ADJACENT FINISH.
2. WOOD TRIMS FOR WINDOWS, DOORS & CASED OPENINGS AT INTERIOR, AND BASE TRIM TO MATCH EXISTING.
3. EXTERIOR WINDOW/DOOR GLAZING SHALL BE DUAL GLAZED, CLEAR AT ALL LOCATIONS. TEMPERED WHERE REQ. ALL WINDOWS/ SLIDING DOORS SHALL BE BY: ANDERSON 400 & 200 SERIES OR SIMILAR. WINDOWS WITH MUNTIN GRIDS PER EXTERIOR ELEVATION DWG. OPERATION: CASEMENT & DBL HUNG SELECTED PER DWG. COLOR: AND HARDWARE FINISH BY HOMEOWNER. PROVIDE SCREEN AT ALL WINDOWS & FRENCH DOORS.
5. LIGHTWEIGHT CONC. TILE ROOF OVER 1/2" CDX PLYWOOD AND ROOFING PAPER OVER 2X ROOF FRAMING PER STRUCT. DWGS. GAF TIMBERLINE ROOFING ULTRA HD OR EQUAL BUILT-UP COMPOSITE ROOFING CLASS-A ICC ESR-3267 (AC438) 2 LAYERS BLDG FELT PER MANUF.
6. SMOOTH COAT STUCCO FINISH OVER 1/2" PLYWOOD AND BUILDING PAPER. COLOR TO BE DETERMINED
7. WOOD SIDING OVER 1/2" PLYWOOD AND BUILDING PAPER. TO MATCH EXISTING.
8. 5/8" GYP. BD. WALLS & CEILING, WATER-RESISTANT TYPE AT WET LOCATIONS. AND TYPE 'X' 5/8" GYP BD. WHERE SPECIFIED. FINISH SHALL MATCH EXISTING, PAINTED AND ALL OUTSIDE CORNERS TO BE METAL 90 degree EDGES.
28. KOHLER NUMI TOILET--.6/1.28 GAL. LOW VOLUME, PER ANSI std.112.19.2, OR SIMILAR
29. 7'-0" VANITY WITH 36" HEIGHT, STONE COUNTERTOP W/ SINK PLUMBING FINISHED FOR 1 SINK PER OWNER. SEE INTERIOR ELEVATIONS FOR DETAILS.
30. 6'-0" VANITY WITH 36" HEIGHT, STONE COUNTERTOP W/ SINK PLUMBING FINISHED FOR 1 SINK PER OWNER. SEE INTERIOR ELEVATIONS FOR DETAILS.
31. BUILT-IN FLOOR-TO-CEILING STORAGE. REFER TO INTERIOR ELEVATIONS FOR DETAILS.
32. CLOSET SHELF @ 6'-0" HT. AND CLOTH POLE OR BUILT-IN CLOSET FIXTURES.
33. BUILT-IN FLOOR-TO-CEILING DRESSER. DETAILS PER INTERIOR DESIGNER. REFER TO INTERIOR ELEVATIONS FOR DETAILS.
34. STONE TUB ENCLOSURE PROVIDE 1/4" ROUND TILE TRIMS AT ALL OUTSIDE CORNERS AND EDGE OF TILE. . HANDHELD, WALL, AND RAIN WALL STONE FROM TUB TO CEILING.
35. KOHLER 'SOK' DROP-IN TUB. 74" X 41"
36. STONE SHOWER ENCLOSURE ON FULL MORTAR BED. WALL STONE FLOOR TO CEILING. PROVIDE 1/4" ROUND TILE TRIMS AT ALL OUTSIDE CORNERS AND EDGE OF TILE. SLOPE TILE TO DRAIN. HANDHELD, WALL, AND RAIN SHOWER HEADS TO BE SUPPLIED. GLASS ENCLOSURE TO BE TEMPERED, FRAMELESS GLASS. 20" H. SEAT TO MATCH LEVEL OF TUB ENCLOSURE.
37. STONE OR TILE FLOORING--STYLE & COLOR TBD BY INT DESIGNER
38. HARDWOOD FLOORING--STYLE & COLOR TBD BY INT. DESIGNER
39. WALL-TO-WALL CARPETING--STYLE & COLOR TBD BY DESIGNER
40. DECK WALKING SYSTEM. DEX-O-TEX WEATHERWEAR SYSTEM (ICC# ESR-1757) (OR EQUAL) COLOR: 402--DARK GRAY
41. BUILT-IN FLOOR-TO-CEILING IT / AV CLOSET STORAGE. REFER TO INTERIOR ELEVATIONS FOR DETAILS.
42. BUILT-IN FLOOR-TO-CEILING LINEN CLOSET STORAGE. REFER TO INTERIOR ELEVATIONS FOR DETAILS.
43. NICHE FOR 85" TELEVISION.
51. 84" LINEAR GAS OR ELECTRIC FIREPLACE WITH INSET ABOVE FOR 85" LED TELEVISION. REFER TO INTERIOR ELEVATIONS FOR DETAILS.
52. BUILT-IN FLOOR-TO-CEILING CABINETRY FOR MEDIA OR OTHER PURPOSES. REFER TO INTERIOR ELEVATIONS FOR DETAILS.
53. BUILT-IN CABINETRY--DISPLAY SHELVING & CABINETS REFER TO INTERIOR ELEVATIONS FOR DETAILS.
54. 18"h. x 12"d. SPA SURROUND / SEATING WALL
55. 84 X 84 DROP-IN SPA
56. LOCATION OF ELECTRICAL PANEL.
57. GAS METER
58. 96" LINEAR GAS FIREPLACE WITH INSET ABOVE FOR 92" LED TELEVISION. REFER TO INTERIOR ELEVATIONS FOR DETAILS.
59. 18"D. X 84"L. SERVICE COUNTER AT SAME HT. AS KITCHEN COUNTER.
60. EXISTING TANKLESS WATER HEATER WITH RECIRCULATING SYSTEM.
61. EXISTING AIR CONDITIONING CONDENSORS
62. 30" X 30"ATTIC ACCESS
63. EXISTING ATTIC-MOUNTED FORCED AIR UNIT, WITH ENCLOSURE. 110v RECEPTACLE, FUEL GAS AND A MINIMUM 30" WIDE PLYWOOD WORKING PLATFORM AND PASSAGEWAY. ALSO PROVIDE FOR MINIMUM 726 C.F.M. WHOLE HOUSE VENTILATION SYSTEM VIA HVAC SYSTEM, PER ASHRAE 62.2
64. PROVIDE ONE LAYER 5/8" TYPE "X" GYPBOARD AT GARAGE WALLS AND CEILING ADJACENT TO LIVING SPACE (GARAGE SIDE ONLY). AS WELL AS UNDER STAIRS. PER SECTION R302.6 OF THE 2020 CRC.
65. WHOLE HOUSE FAN--PANASONIC SELECTCYCLER WHOLE HOUSE VENTILATION SOLUTION--SACG2K COMPLIES WITH ASHRAE 4.1.1, 4.1.2, & 62.2 REQMTS.

WALL TYPES

- 1-LAYERS 5/8" GYPSUM BOARD OVER 2x4 (UNLESS OTHERWISE NOTED) STUDS AT 16" O.C. AT BOTH SIDES. AT INTERIOR WALLS & CEILINGS, WATER-RESISTANT TYPE AT WET LOCATIONS. FINISH SHALL MATCH EXISTING, PAINTED AND ALL OUTSIDE CORNERS TO BE METAL 90 DEGREE EDGES. EXTERIOR PLASTER AT EXTERIOR WALLS 7/8" THICK WITH BUILDING PAPER..
- EXISTING WALLS- PATCH AND REPAIR AS NEEDED TO MATCH EXISTING FINISHED SURFACES.
- 1-HOUR RATED WALL. 1-LAYERS 5/8" GYP. BD. TYPE 'X' OVER 2x4 (UNLESS OTHERWISE NOTED) STUDS AT 16" O.C. AT BOTH SIDES. AT INTERIOR WALLS & CEILINGS, FINISH SHALL MATCH EXISTING, PAINTED AND ALL OUTSIDE CORNERS TO BE METAL 90 DEGREE EDGES. EXTERIOR PLASTER AT EXTERIOR WALLS 7/8" THICK WITH BUILDING PAPER.

BLDG. DEPT. NOTES

A. OCCUPANCY GROUP: R3-U
B. TYPE OF CONSTRUCTION: VB
C. APPLICABLE CODES: 2020 CBC, 2020 CPC, 2020 CMC, 2020 CEC EDITIONS UNDER WHICH THIS PROJECT IS TO BE APPROVED.
D. PROVIDE 1" CLEAR AIR SPACE BETWEEN INSULATION & ROOF SHEATHING TO ENSURE FREE AIRFLOW IN THE ATTIC SPACE.
E ALL NEW LOW-RISE RESIDENTIAL BUILDINGS AND ADDITION OVER 1000 S.F. MUST HAVE A WHOLE HOUSE VENTILATION SYSTEM THAT PROVIDES A CALCULATED MINIMUM AMOUNT OF OUTDOOR AIR BY USING EITHER A CONTINUOUSLY RUNNING BATHROOM FAN OR A SUPPLY OR RETURN AIR VENTILATION THRU A CENTRAL HVAC SYSTEM. THE MINIMUM VENTILATION VOLUME MUST BE A MINIMUM OF 1 C.F.M FOR EACH 100 S.F. OF FLOOR AREA (53 C.F.M.) PLUS 7.5 C.F.M. FOR EACH OCCUPANT. THE NUMBER OF OCCUPANTS IS DETERMINED BY MULTIPLYING THE NUMBER OF BEDROOMS (5) AND THEN ADDING ONE (TOTAL: 45) (TOTAL C.F.M. REQUIRED: 98) (ASHRAE 62.2)

REFER TO SHEET A-3.0 FOR WINDOW & DOOR SCHEDULES

GENERAL NOTES
1. FINISH GARAGE WALL AND CEILING W/GYPSUM BOARD REFERENCE PLANS AND SECTIONS FOR TYPE AND THICKNESS.
2. GLASS SHOWER ENCLOSURES AND GLASS ENCLSURES IN ALL BATHROOMS SHALL BE TEMPERED.
3. THE DRYER'S MOISTURE EXHAUST DUCT SHALL NOT EXCEED A TOTAL COMBINED HORIZONTIAL AND VERTICAL LENGTH OF 14'-0" INCLUDING TWO 90-DEGREE ELBOWS PER CMC 504.3.2.2. EXCEPTION USE 5" DRYER VENT DUCT MAX LENGHT = 21'-0"

PLUMBING NOTES
NOTE: MAXIMUM FLUSH VALUMES AND FLOW RATES. WATER CLOSET: 1.28 GALLONS PER FLUSH SHOWERHEADS: 2.0 GALLONS PER MINUTE. FAUCETS: 1.2 GALLONS (LAV) / 1.8 GALLONS (SINK) PER MINUTE
NOTE: EXISTING PLUMBING FIXTURES SHALL BE REPLACED IN COMPLIANCE WITH SB407.

GENERAL NOTES

A. EXTERIOR WINDOW/DOOR GLAZING SHALL BE DUAL GLAZED, LOW-E, CLEAR GLASS, AT ALL LOCATIONS, OWNER TO CHOSE COLOR AND MANUFACTURER.
- WINDOW U-FACTOR 0.34
- WINDOW SHGC 0.28
- RADIANT BARRIER NOT REQUIRED

B. TEMPERED GLASS AT GLAZED DOORS, SHOWER DOORS, SIDE LITES, & WITHIN 18" OF FIN. FLR. & 40" OF A LOCKING DEVICE IN CONFORMANCE TO CRC R308.4

C. R-30 FOR ROOF INSULATION
R-13 FOR WALLS
SLAB FOUNDATION

D. REPAIR ALL TRANSITIONAL AREAS BETWEEN EXISTING AND NEW WORK DUE TO DEMOLITION.

E. DIMENSIONS TO FACE OF FINISH WALL AT ALL WALLS.

F. ALL NEW EXTERIOR WALL/CEILING SURFACES SHALL BE PAINTED WITH SCHEME PER OWNER'S INSTRUCTION. SCRAPE AND REMOVE ALL EXISTING (NEXT TO NEW WORK) LOOSE PAINT PER MANUFACTURER'S SPEC. AND PREPARE SURFACES FOR NEW PRIMER & PAINT.

G. CABINETRY:
ALL BUILT-IN CABINETRY TO BE DONE BY CABINET SUB-CONTRACTORS, OWNER TO CHOSE WHO DOES WORK.

H. THERE IS NO SOIL REPORT FOR THIS PROJECT, USE 1000 PSF SOIL BEARING.

I. ALL DOORS AND WINDOWS WILL BE NEW WHERE INDICATED ON THE DWGS.

J. REGARDING DEMOLITION, CAP ALL EXISTING UTILITIES & PREPARE FOR NEW WORK AS REQUIRED.

K. REMOVE, DEMOLISH AND REROUTE EXISTING LANDSCAPE SPRINKLER SYSTEM THAT OBSTRUCTS NEW WORK. MAINTAIN AN OPERATIONAL LANDSCAPE IRRIGATION SYSTEM.

L. ALL NEW WOOD DOOR/WINDOW TRIMS SHALL BE MADE OF MDF OR WOOD. PROVIDE WOOD AT ALL INTERIOR LOCATIONS

N. DRYWALL SHALL BE 5/8" THICK, MOISTURE RESISTANT AT WET LOCATIONS. FINISH SMOOTH TO MATCH EXISTING TEXTURE.

O. THE CONTRACTOR IS RESPONSIBLE TO COMPLY WITH ALL GOVERNING BLDG. CODES AND CITY ORDINANCES.

P. PROVIDE ATTIC VENTILATION PER 2016 CRC R608 VIA VENTS.

Q. PATCH, RESTORE, AND REFINISH ALL AREAS DAMAGED BY THE CONSTRUCTION WORK AND DEMOLITION.

R. ALL NEW DOORS TO BE SOLID OR HOLLOW CORE W SOLID WOOD JAMB FRAMES, PER HOMEOWNERS' INSTRUCTION.

S. ALL FINISHES TO HAVE OWNERS APPROVAL PRIOR TO COMPLETION OF PROJECT.

T. THE MOISTURE CONTENT OF CONSTRUCTION MATERIALS AND INSULATION SHALL BE VERIFIED PRIOR TO APPROVAL TO ENCLOSE WALL AND FLOOR CAVITIES WITH DRYWALL OR OTHER FINISH SURFACES. (4.505.3.CGBSC)

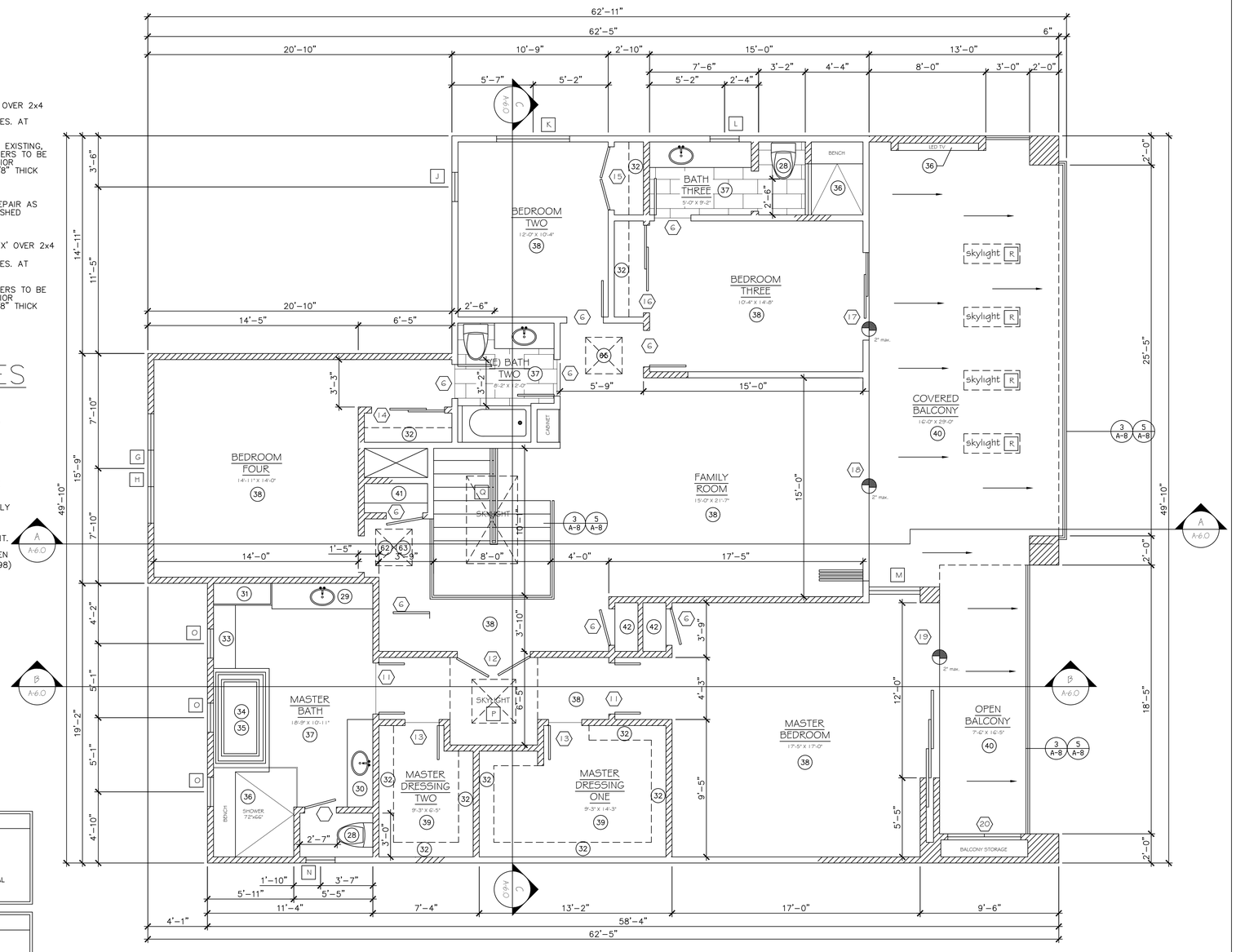

FLOOR PLAN--SECOND FLOOR

Mark M. Wheeler
April 1, 2024

REVISIONS	–
	–
–	–
–	–

The Cirks Residence
3542 VENTURE DRIVE ~ HUNTINGTON HARBOUR ~ HUNTINGTON BEACH, CA 92648

mark wheeler
RESIDENTIAL DESIGN
325 ROYCROFT AVENUE
LONG BEACH, CA. 90814
562-519-3965
562-494-0570

DATE: 4-1-24
SCALE: AS NOTED
DRAWN:MMW
JOB: A-788
SHEET: A-3.1
OF – SHEETS

ELEC./MECH./PLUMBING NOTES

1. ALL LIGHTING FIXTURES TO BE SUPPLIED BY OWNER
2. FINISH ELECTRICAL COVER PLATES, SWITCH, ETC. SHALL BE LEVITON DECORA, COLOR PER ARCHITECT.
3. WITHIN INACCESSABLE CEILINGS, USE ACCESSABLE TYPE LT. FIXTURES
4. IMPORTANT NOTE: VERIFY WITH OWNER REGARDING FUTURE UTILITY (ELEC., WATER, GAS, SHOWER, ETC.) NEEDS PRIOR TO START OF WORK.
5. ELEC. CONTRACTOR TO VERIFY POWER REQUIREMENT OF APPLIANCES & L.T. FIXTURES BEFORE INSTALL TO ENSURE APPROPRIATE POWER SUPPLY TO APPLIANCES.
6. GROUND FAULT PROTECTION IS REQUIRED FOR ALL GRADE ACCESS EXT. OUTLETS, OUTLETS IN BATHROOMS, BASEMENT, CRAWL SPACE, GARAGE, WITHIN 6' OF KITCHEN SINK, AND EXTERIOR OUTLETS.
7. ALL LIGHT FIXTURES RECESSED INTO INSULATED CEILINGS MUST BE APPROVED FOR ZERO CLEARANCE INSULATION COVER (I.C.) BY UNDERWRITERS LAB. OR OTHER TESTING/RATING LAB. RECOGNIZED BY THE ICC AS PER TITLE 24.
8. SPECIFY FLUORESCENT LIGHT FIXTURES RATED AT NO LESS THAN 40/LUMENS PER WATT FOR GENERAL LIGHTING IN KITCHEN & BATHS PER TITLE 24
9. PROVIDE HIGH EFFICACY FIXTURES FOR ALL PERMANENTLY INSTALLED LIGHTING AS REQUIRED BY SECTION 150.0(k)1A IN THE 2020 CEC.
10. PROVIDE AFCI PROTECTED BRANCH CIRCUITS TO ALL ROOMS EXCEPT THEY ARE NOT REQUIRED TO THE BATHROOMS BASED ON ARTICLE 210.12 IN THE 2020 CEC.
11. PROVIDE DEDICATED 20 AMP CIRCUITS TO THE BATHROOMS & LAUNDRY ROOM AS REQUIRED BY ARTICLES 210.11(C)(2&3), 210.52 (B,D&F), & 406.9 IN THE 2020 CEC.
12. PROVIDE AT LEAST TWO 20 AMP SMALL APPLIANCE CIRCUITS TO THE KITCHEN AS REQUIRED BY ARTICLE 210.11(C)(1) IN THE 2019 CEC.
13. G.C. IS RESPONSIBLE FOR INSTALLATION OF SEWER, ELECTRIC, GAS, WATER AND OTHER UTILITIES SUFFICIENT FOR THE OPERATION OF THE HOUSE.
15. ALL PLUMBING FIXTURES AND FITTINGS ARE NEW IN COMPLIANCE WITH SB407.
16. PROVIDE PRESSURE BALANCE AND/OR THERMOSTATIC MIXING VALVES IN THE SHOWERS AS REQUIRED BY SECTION 408.3 IN THE 2020 CPC.
17. PROVIDE WATER HOSE BIB PER LOCATIONS PER DWGS.
18. PROVIDE SUFFICIENT VENTILATION FOR BATHROOMS & LAUNDRY RM WITHOUT OPENABLE WINDOWS PER 2020 CALGREEN CODE, SEC. 4.506.
19. TITLE-24 ENERGY REQUIREMENTS:
   - A. A MINIMUM 50% OF THE LUMINARIES IN THE KITCHEN MUST BE FLUORESCENT OR HIGH EFFICACY FIXTURES.
   - B. ALL LUMINAIRES AREA TO BE HIGH EFFICACY AND AT LEAST ONE LUMINAIRE IN EACH OF THESE SPACES MUST BE CONTROLLED BY A VACANCY SENSOR.
   - C. BEDROOMS, LIVING ROOMS, FAMILY ROOMS AND OTHER ROOMS USED FOR LIVING AND SLEEPING MUST HAVE FLUORESCENT OR HIGH EFFICACY LIGHTING, OR AN OCCUPANT SENSOR, OR DIMMERS MAY BE INSTALLED.
   - D. EXTERIOR LIGHTING MUST BE FLUORESCENT OR HIGH EFFICACY, OR AN OCCUPANT SENSOR WITH AN INTEGRAL PHOTO CONTROL MAY BE INSTALLED.

ELECTRICAL LEGEND

- SWITCH AT 42" HT. U.O.N.
- 3-WAY OR 4-WAY SWITCH AT 42" HT. U.O.N.
- DIMMER SWITCH AT 42" HT. U.O.N.
- MANUAL-ON OCCUPANT MOTION SENSOR AT 42" HT. U.O.N.
- SURFACE MOUNTED LED FIXTURE (WALL/CEILING)
- SURFACE MOUNTED LED FIXTURE (WALL/CEILING) WITH MOTION SENSOR
- HIGH EFFICACY LED LIGHTS (4" CAN W/WHITE HAZE TRIM)
- WATER & MOISTURE RESISTANT 4" LED CAN LIGHTING (W/WHITE HAZE TRIM)
- LED 2" LIGHT FIXTURES-PENDANTS
- JUNCTION BOX FOR CEILING HUNG FIXTURE
- RECESS CEILING EXHAUST FAN, W/HUMIDITY CONTROL SENSOR HAVING A MINIMUM CAPACITY OF 50 CFM DUCTED TO TERMINATE OUTSIDE THE BUILDING. (CRC R303.3, CAL GREEN 4.506.1, CBC 1202.5.2.1, CMC402.5)
- DUPLEX RECEPTACLE SET IN FLOOR EXACT LOCATION PER INTERIOR DESIGNER
- DUPLEX RECEPTACLE AT 12" HT U.O.N. AND 8" ABOVE COUNTERTOP
- G.F.I. DUPLEX RECECEPTACLE 12" ABOVE FIN. FLR. or 6" ABOVE COUNTER or SET IN CABINET
- SMOKE DETECTOR, HARDWIRE INTERCONNECTED TO SOUND AT THE SAME TIME WITH BATTERY BACK-UP.
- CARBON MONOXIDE DETECTOR, HARDWIRE INTERCONNECTED TO SOUND AT THE SAME TIME WITH BATTERY BACK-UP.
- PLUG MOLD
- LED STRIP LIGHTING
- 72" CEILING FLOUR. LIGHT FIXTURE.

GENERAL NOTES

PROVIDE G.F.C.I. PROTECTION TO ALL 120 VOLTS, 15 AND 20 AMP RECEPTICALS INSTALLED OUTDOORS, IN BATHROOMS, IN BASEMENT AT COUNTERTOP SURFACES, AND GARAGES.

PROVIDE SMOKE DETECTORS POWERED BY HOUSE ELEC, WITH BATTERY MONITORED BACKUP, SHALL BE INSTALLED IN EACH SLEEPING ROOM AND IN THE HALL OR IMMEDIATELY OUTSIDE EACH SLEEPING AREA; AND ON THE HIGHEST CEILING POINT OF EACH ADDITIONAL STORY OF THE RESIDENCE. ALL SMOKE DETECTORS SHALL BE INTER-CONNECTED SO THE ACTIVITY OF ANY ONE DEVICE WILL CAUSE ALL TO SOUND.

PROVIDE REQ'D CONNECTION FOR GARAGE DOOR OPENER(S)

PROVIDE REQD. CONNECTIONS FOR ALL KITCHEN APPLIANCES

PROVIDE REQ'D CONNECTIONS FOR MECH. EQUIPMENT.

ALL RECESS CANS SHALL BE IC RATED.

ALL bath outlets are to be on at least one seperate 20 amp gfi protected circut.

PROVIDE ARC FAULT CIRCUIT INTERRUPTER TO ALL 15 AND 20 AMP OUTLETS IN ALL DWELLING ROOMS (RECEPTICALS, SWTCHES, LIGHTS, SMOKE DETECTORS, ETC.)

A 20 FOOT #4 UFER GROUNDING ELECTRODE WILL BE PROVIDED FOR GROUNDING THE ELECTRICAL SYSTEM. GAS AND WATER LINES SHALL BE BONDED.

GENERAL PURPOSE LIGHTING FIXTURES IN KITCHEN AND BATHROOMS SHALL HAVE LAMPS WITH A EFFICACY OF AT LEAST 40 LUMEN PER WATTS. BATHROOM FLUORSCENTS LIGHTS ARE REQUIRED IN THE AREAS CONTAINING TUB OR SHOWER FACILITIES.

LIGHTING INSTALLED IN ATTACHED AND DETACHED GARAGES, LAUNDRY ROOMS AND UTILITY ROOMS SHALL BE HIGH EFFICACY LUMINAIRES AND CONTROLLED BY EITHER DIMMERS OR VACANCY SENSORS.

LIGHTING INSTALLED IN ROOMS OR OTHER AREAS OTHER THAN KITCHENS, BATHROOMS, GARAGES, LAUNDRY ROOMS AND UTILITY ROOMS SHALL BE HIGH EFFICACY AND SHALL BE CONTROLLED BY EITHER DIMMERS OR VACANCY SENSORS.

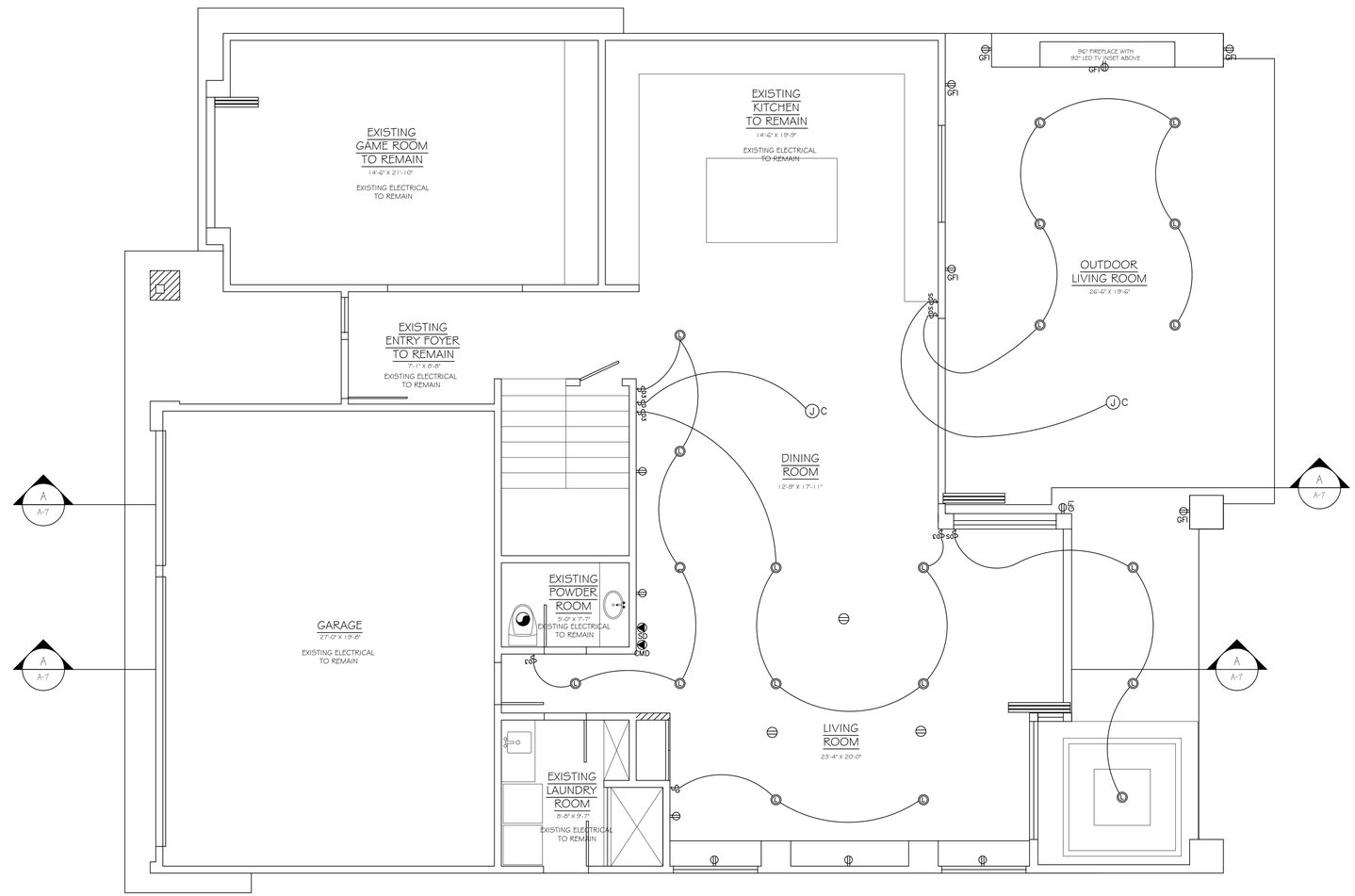

Mark M. Wheeler
April 1, 2024

ELECTRICAL / REFLECTED CEILING PLAN--FIRST FLOOR

REVISIONS	–
	–
–	–
–	–

The Bowers Residence
6442 GARLAND CIRCLE ~ THE PENINSULA ~ HUNTINGTON BEACH, CA 92648

mark wheeler
RESIDENTIAL DESIGN
325 ROYCROFT AVENUE
LONG BEACH, CA. 90814
562-619-3965
562-684-0570

DATE: 4-1-24
SCALE: AS NOTED
DRAWN: MMW
JOB: A-788
SHEET: A-4
OF – SHEETS

ELEC./MECH./PLUMBING NOTES

1. ALL LIGHTING FIXTURES TO BE SUPPLIED BY OWNER
2. FINISH ELECTRICAL COVER PLATES, SWITCH, ETC. SHALL BE LEVITON DECORA, COLOR PER ARCHITECT.
3. WITHIN INACCESSABLE CEILINGS, USE ACCESSABLE TYPE L.T. FIXTURES
4. IMPORTANT NOTE: VERIFY WITH OWNER REGARDING FUTURE UTILITY (ELEC., WATER, GAS, SHOWER, ETC.) NEEDS PRIOR TO START OF WORK.
5. ELEC. CONTRACTOR TO VERIFY POWER REQUIREMENT OF APPLIANCES & L.T. FIXTURES, BEFORE INSTALL, TO ENSURE APPROPRIATE POWER SUPPLY TO APPLIANCES.
6. GROUND FAULT PROTECTION IS REQUIRED FOR ALL GRADE ACCESS EXT. OUTLETS, OUTLETS IN BATHROOMS, BASEMENT, CRAWL SPACE, GARAGE, WITHIN 6' OF KITCHEN SINK, AND EXTERIOR OUTLETS.
7. ALL LIGHT FIXTURES RECESSED INTO INSULATED CEILINGS MUST BE APPROVED FOR ZERO CLEARANCE INSULATION COVER (I.C.) BY UNDERWRITERS LAB. OR OTHER TESTING/RATING LAB. RECOGNIZED BY THE ICC AS PER TITLE 24.
8. SPECIFY FLUORESCENT LIGHT FIXTURES RATED AT NO LESS THAN 40/LUMENS PER WATT FOR GENERAL LIGHTING IN KITCHEN & BATHS PER TITLE 24
9. PROVIDE HIGH EFFICACY FIXTURES FOR ALL PERMANENTLY INSTALLED LIGHTING AS REQUIRED BY SECTION 150.0(k)1A IN THE 2020 CEC.
10. PROVIDE AFCI PROTECTED BRANCH CIRCUITS TO ALL ROOMS EXCEPT THEY ARE NOT REQUIRED TO THE BATHROOMS BASED ON ARTICLE 210.12 IN THE 2020 CEC.
11. PROVIDE DEDICATED 20 AMP CIRCUITS TO THE BATHROOMS & LAUNDRY ROOM AS REQUIRED BY ARTICLES 210.11(C)(2&3), 210.52 (B,D&F), & 406.9 IN THE 2020 CEC.
12. PROVIDE AT LEAST TWO 20 AMP SMALL APPLIANCE CIRCUITS TO THE KITCHEN AS REQUIRED BY ARTICLE 210.11(C)(1) IN THE 2019 CEC.
13. G.C. IS RESPONSIBLE FOR INSTALLATION OF SEWER, ELECTRIC, GAS, WATER AND OTHER UTILITIES SUFFICIENT FOR THE OPERATION OF THE HOUSE.
15. ALL PLUMBING FIXTURES AND FITTINGS ARE NEW IN COMPLIANCE WITH SB407.
16. PROVIDE PRESSURE BALANCE AND/OR THERMOSTATIC MIXING VALVES IN THE SHOWERS AS REQUIRED BY SECTION 408.3 IN THE 2020 CPC.
17. PROVIDE WATER HOSE BIB PER LOCATIONS PER DWGS.
18. PROVIDE SUFFICIENT VENTILATION FOR BATHROOMS & LAUNDRY RM WITHOUT OPENABLE WINDOWS PER PER 2020 CALGREEN CODE, SEC. 4.506.
19. TITLE-24 ENERGY REQUIREMENTS:
   - A. A MINIMUM 50% OF THE LUMINARIES IN THE KITCHEN MUST BE FLUORESCENT OR HIGH EFFICACY FIXTURES.
   - B. ALL LUMINAIRES AREA TO BE HIGH EFFICACY AND AT LEAST ONE LUMINAIRE IN EACH OF THESE SPACES MUST BE CONTROLLED BY A VACANCY SENSOR.
   - C. BEDROOMS, LIVING ROOMS, FAMILY ROOMS AND OTHER ROOMS USED FOR LIVING AND SLEEPING MUST HAVE FLUORESCENT OR HIGH EFFICACY LIGHTING, OR AN OCCUPANT SENSOR, OR DIMMERS MAY BE INSTALLED.
   - D. EXTERIOR LIGHTING MUST BE FLUORESCENT OR HIGH EFFICACY, OR AN OCCUPANT SENSOR WITH AN INTEGRAL PHOTO CONTROL MAY BE INSTALLED.

ELECTRICAL LEGEND

- $ — SWITCH AT 42" HT. U.O.N.
- $3 — 3-WAY OR 4-WAY SWITCH AT 42" HT. U.O.N.
- $D — DIMMER SWITCH AT 42" HT. U.O.N.
- $S — MANUAL-ON OCCUPANT MOTION SENSOR AT 42" HT. U.O.N.
- L — SURFACE MOUNTED LED FIXTURE (WALL/CEILING)
- S — SURFACE MOUNTED LED FIXTURE (WALL/CEILING) WITH MOTION SENSOR
- L — HIGH EFFICACY LED LIGHTS (4" CAN W/WHITE HAZE TRIM)
- W — WATER & MOISTURE RESISTANT 4" LED CAN LIGHTING (W/WHITE HAZE TRIM)
- 2" — LED 2" LIGHT FIXTURES-PENDANTS
- J C — JUNCTION BOX FOR CEILING HUNG FIXTURE
- RECESS CEILING EXHAUST FAN, W/HUMIDITY CONTROL SENSOR HAVING A MINIMUM CAPACITY OF 50 CFM DUCTED TO TERMINATE OUTSIDE THE BUILDING. (CRC R303.3, CAL GREEN 4.506.1, CBC 1202.5.2.1, CMC402.5)
- DUPLEX RECEPTACLE AT 12" HT U.O.N. AND 8" ABOVE COUNTERTOP
- GFI — G.F.I. DUPLEX RECECEPTACLE 12" ABOVE FIN. FLR. or 6" ABOVE COUNTER or SET IN CABINET
- SD — SMOKE DETECTOR, HARDWIRE INTERCONNECTED TO SOUND AT THE SAME TIME WITH BATTERY BACK-UP.
- CMD — CARBON MONOXIDE DETECTOR, HARDWIRE INTERCONNECTED TO SOUND AT THE SAME TIME WITH BATTERY BACK-UP.
- PLUG MOLD
- LED STRIP LIGHTING
- 72" CEILING FLOUR. LIGHT FIXTURE.

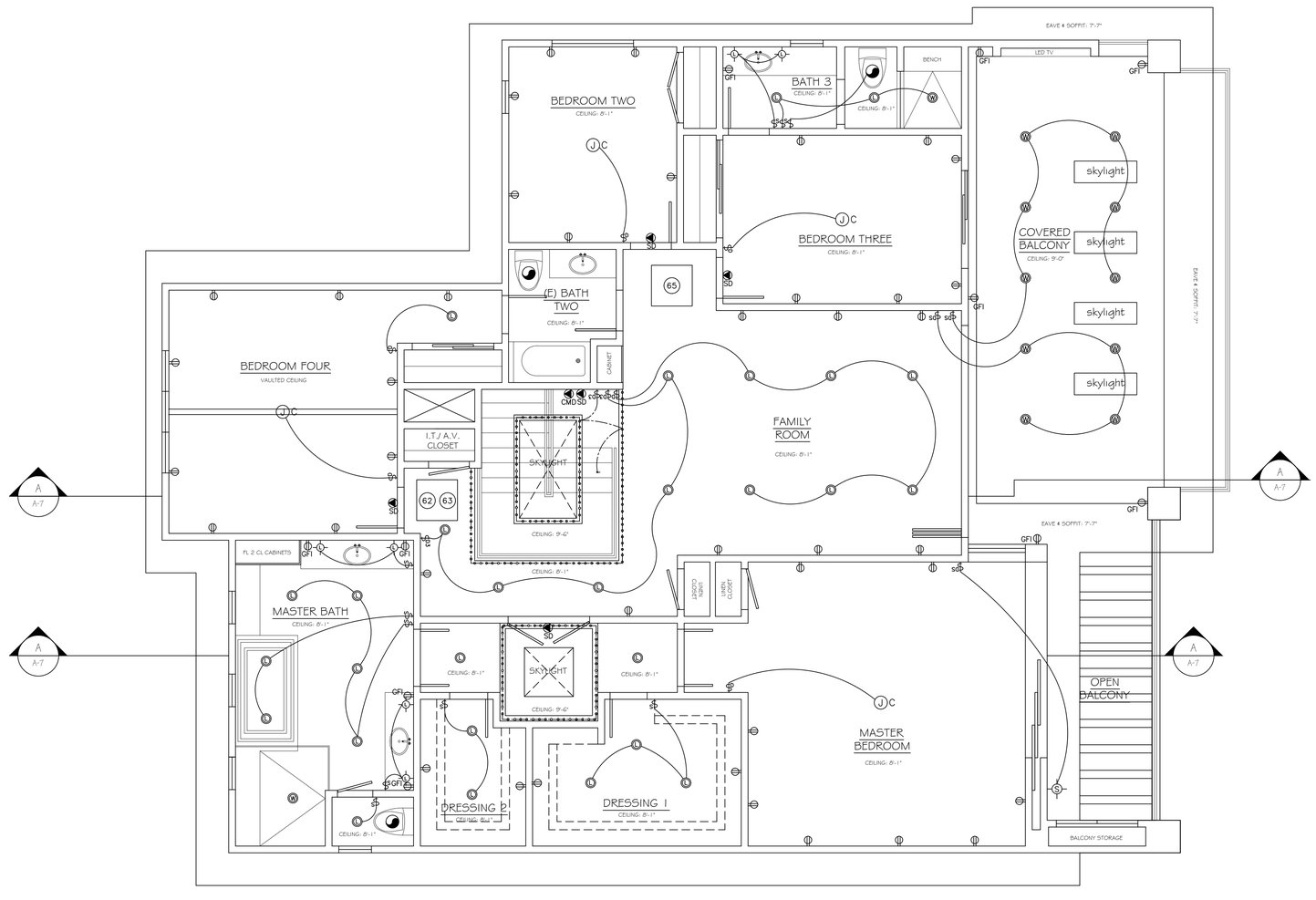

GENERAL NOTES

PROVIDE G.F.C.I. PROTECTION TO ALL 120 VOLTS, 15 AND 20 AMP RECEPTICALS INSTALLED OUTDOORS, IN BATHROOMS, IN BASEMENT AT COUNTERTOP SURFACES, AND GARAGES.

PROVIDE SMOKE DETECTORS POWERED BY HOUSE ELEC. WITH BATTERY MONITORED BACKUP, SHALL BE INSTALLED IN EACH SLEEPING ROOM AND IN THE HALL OR IMMEDIATELY OUTSIDE EACH SLEEPING AREA; AND ON THE HIGHEST CEILING POINT OF EACH ADDITIONAL STORY OF THE RESIDENCE. ALL SMOKE DETECTORS SHALL BE INTER-CONNECTED SO THE ACTIVITY OF ANY ONE DEVICE WILL CAUSE ALL TO SOUND.

PROVIDE REQ'D CONNECTION FOR GARAGE DOOR OPENER(S)

PROVIDE REQD. CONNECTIONS FOR ALL KITCHEN APPLIANCES

PROVIDE REQ'D CONNECTIONS FOR MECH. EQUIPMENT.

ALL RECESS CANS SHALL BE IC RATED.

ALL bath outlets are to be on at least one seperate 20 amp gfi protected circut.

PROVIDE ARC FAULT CIRCUIT INTERRUPTER TO ALL 15 AND 20 AMP OUTLETS IN ALL DWELLING ROOMS (RECEPTICALS, SWITCHES, LIGHTS, SMOKE DETECTORS, ETC.)

A 20 FOOT #4 UFER GROUNDING ELECTRODE WILL BE PROVIDED FOR GROUNDING THE ELECTRICAL SYSTEM. GAS AND WATER LINES SHALL BE BONDED.

GENERAL PURPOSE LIGHTING FIXTURES IN KITCHEN AND BATHROOMS SHALL HAVE LAMPS WITH A EFFICACY OF AT LEAST 40 LUMEN PER WATTS. BATHROOM FLUORSCENTS LIGHTS ARE REQUIRED IN THE AREAS CONTAINING TUB OR SHOWER FACILITIES.

LIGHTING INSTALLED IN ATTACHED AND DETACHED GARAGES, LAUNDRY ROOMS AND UTILITY ROOMS SHALL BE HIGH EFFICACY LUMINAIRES AND CONTROLLED BY EITHER DIMMERS OR VACANCY SENSORS.

LIGHTING INSTALLED IN ROOMS OR OTHER AREAS OTHER THAN KITCHENS, BATHROOMS, GARAGES, LAUNDRY ROOMS AND UTILITY ROOMS SHALL BE HIGH EFFICACY AND SHALL BE CONTROLLED BY EITHER DIMMERS OR VACANCY SENSORS.

ELECTRICAL / REFLECTED CEILING PLAN--SECOND FLOOR

Mark M. Wheeler
April 1, 2024

REVISIONS	–
	–
–	–
–	–

The Bowers Residence
6442 GARLAND CIRCLE ~ THE PENINSULA ~ HUNTINGTON BEACH, CA 92648

mark wheeler
RESIDENTIAL DESIGN
325 ROYCROFT AVENUE
LONG BEACH, CA. 90814
562-519-3945
562-684-0570

DATE: 4-1-24
SCALE: AS NOTED
DRAWN: MMW
JOB: A-788
SHEET: A-4.1
OF – SHEETS

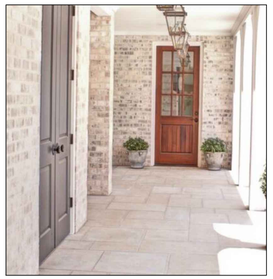

*NOTE: COLOR SCHEME TO REMAIN AS EXISTING, AS SHOWN ABOVE, EXCEPT THAT USED NATURAL BRICK UTILIZING AN OVERGROUT (SEE LEFT) WILL REPLACE THE STONE ON THE FACE OF THE HOUSE AND FRONT WALL ABOVE.

FRONT ELEVATION
W/ EXISTING FRONT WALL

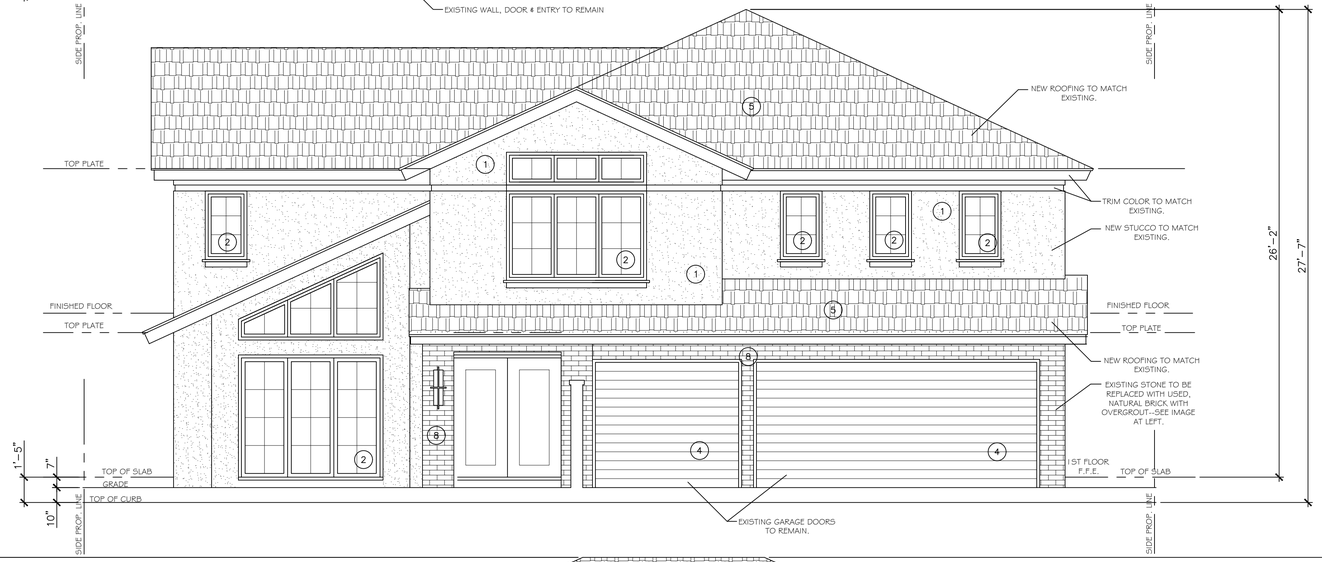

FRONT ELEVATION

ELEVATION KEYNOTES

1. SMOOTH COAT STUCCO TO MATCH EXISTING IN COLOR
2. NEW WINDOWS TO MATCH EXISTING SEE WINDOW SCHEDULE ON SHEET A-3.0 FOR DETAILS
3. NEW DOORS TO MATCH EXISTING SEE DOOR SCHEDULE ON SHEET A-3.0 FOR DETAILS
4. REFINISH EXISTING GARAGE DOOR
5. EAGLE--3687--ICC-ES AC180 CONCRETE TILE CLASS-A BROWN GRAY RANGE TO MATCH EXISTING
6. LOCATION OF ELECTRIC PANEL
7. LOCATION OF GAS METER
8. USED NATURAL BRICK VENEER W/OVERGROUT TECHNIQUE

INSULATION REQUIREMENTS	
WALLS:	13
CEILING/ROOFS:	30
FLOORING:	19

INSULATION AT ALL WALL INTERIOR AND EXTERIOR

SEE STRUCTURAL DRAWINGS FOR EXACT LOCATION OF FRAMING

FIRE BLOCKING IS REQUIRED IN CONCEALED SPACES 10" O.C. HORIZONTAL, VERTICAL AT THE CEILING AND FLOOR LEVELS, CONNECTIONS BETWEEN HORIZONTIAL AND VERTICAL SPACES, CONCEALED SPACES BETWEEN STAIR AND LANDING, OPENINGS AROUND VENTS, PIPES, DUCTS, CABLES, WIRES, CHIMNEYS AND FIREPLACES.

PROPOSED
EAST SIDE ELEVATION

Mark M. Wheeler
April 1, 2024

EXTERIOR ELEVATIONS

REVISIONS	–
	–
–	–
–	–

The Cirks Residence
3542 VENTURE DRIVE ~ HUNTINGTON HARBOUR ~ HUNTINGTON BEACH, CA 92648

mark wheeler
RESIDENTIAL DESIGN
325 ROYCROFT AVENUE
LONG BEACH, CA. 90814
562-619-3565
562-619-3990
562-684-0570

DATE: 4-1-24
SCALE: AS NOTED
DRAWN: MMW
JOB: A-788
SHEET: A-5.0
OF – SHEETS

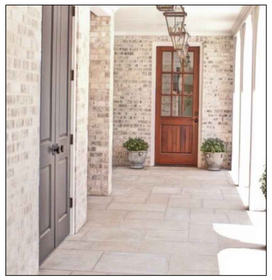

*NOTE: COLOR SCHEME TO REMAIN AS EXISTING, AS SHOWN ABOVE, EXCEPT THAT USED NATURAL BRICK UTILIZING AN OVERGROUT (SEE LEFT) WILL REPLACE THE STONE ON THE FACE OF THE HOUSE AND FRONT WALL ABOVE.

PROPOSED REAR ELEVATION

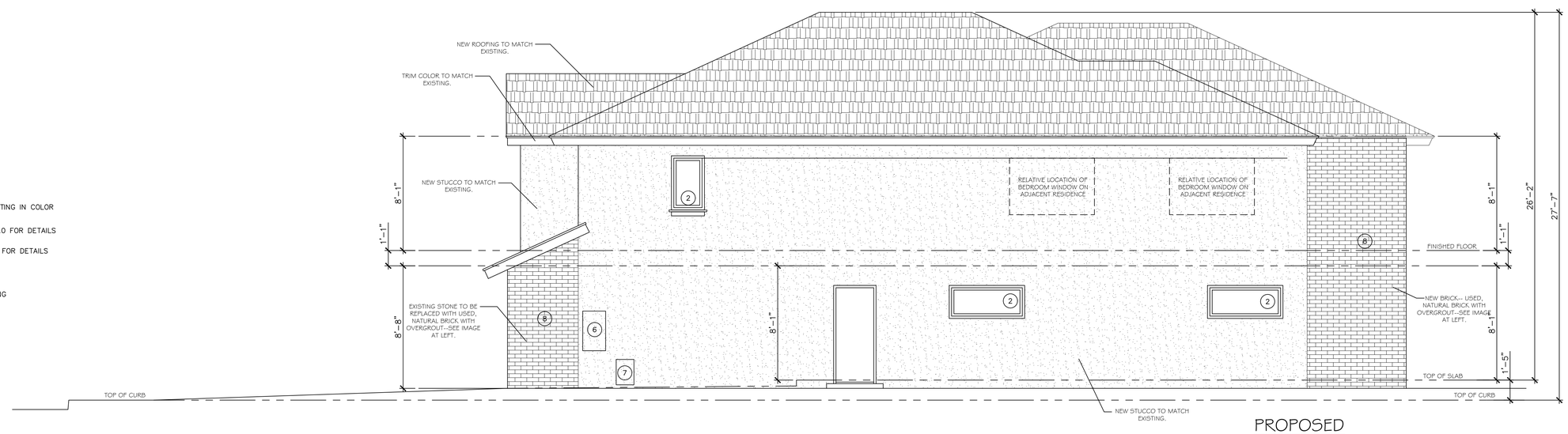

PROPOSED
WEST SIDE ELEVATION

ELEVATION KEYNOTES

1. SMOOTH COAT STUCCO TO MATCH EXISTING IN COLOR
2. NEW WINDOWS TO MATCH EXISTING SEE WINDOW SCHEDULE ON SHEET A-3.0 FOR DETAILS
3. NEW DOORS SEE DOOR SCHEDULE ON SHEET A-3.0 FOR DETAILS
4. REFINISH EXISTING GARAGE DOOR
5. EAGLE---3687--ICC-ES AC180 CONCRETE TILE CLASS-A BROWN GRAY RANGE TO MATCH EXISTING
6. LOCATION OF ELECTRIC PANEL
7. LOCATION OF GAS METER
8. USED NATURAL BRICK VENEER W/OVERGROUT TECHNIQUE

INSULATION REQUIREMENTS
WALLS: 13
CEILING/ROOFS: 30
FLOORING: 19
INSULATION AT ALL WALL INTERIOR AND EXTERIOR

SEE STRUCTURAL DRAWINGS FOR EXACT LOCATION OF FRAMING

FIRE BLOCKING IS REQUIRED IN CONCEALED SPACES 10" O.C. HORIZONTAL, VERTICAL AT THE CEILING AND FLOOR LEVELS, CONNECTIONS BETWEEN HORIZONTAL AND VERTICAL SPACES, CONCEALED SPACES BETWEEN STAIR AND LANDING, OPENINGS AROUND VENTS, PIPES, DUCTS, CABLES, WIRES, CHINMNEYS AND FIREPLACES.

Mark M. Wheeler
April 1, 2024

EXTERIOR ELEVATIONS

REVISIONS	–
	–
–	–
–	–

The Cirks Residence
3542 VENTURE DRIVE ~ HUNTINGTON HARBOUR ~ HUNTINGTON BEACH, CA 92648

mark wheeler
RESIDENTIAL DESIGN
325 ROYCROFT AVENUE
LONG BEACH, CA. 90814
562-619-3565
562-619-3990
562-684-0570

DATE: 4-1-24
SCALE: AS NOTED
DRAWN:MMW
JOB: A-788
SHEET:
A-5.1
OF – SHEETS

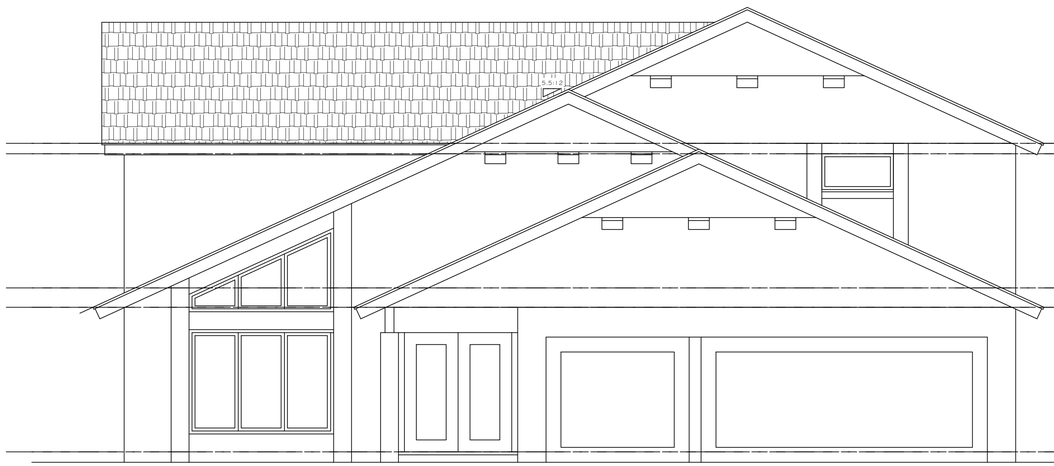

EXISTING
FRONT ELEVATION

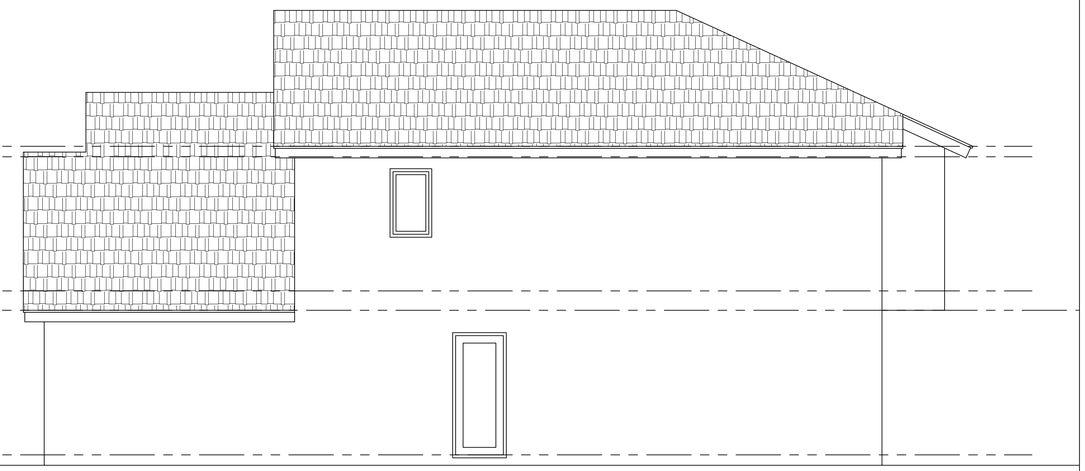

EXISTING
WEST SIDE ELEVATION

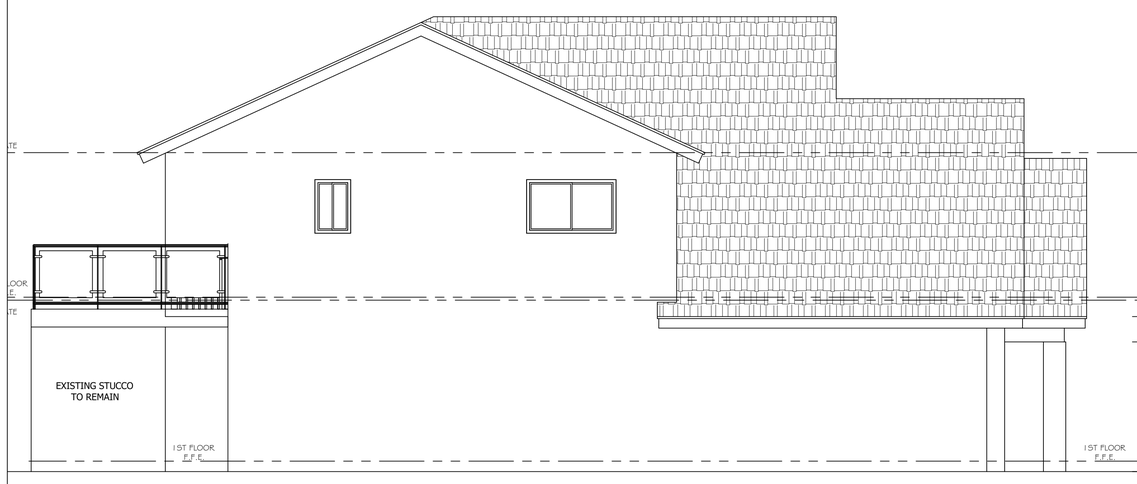

EXISTING
EAST SIDE ELEVATION

EXISTING
REAR ELEVATION

Mark M. Wheeler
April 1, 2024

EXISTING
EXTERIOR ELEVATIONS

REVISIONS	–
	–
–	–
–	–

The Cirks Residence

3542 VENTURE DRIVE ~ HUNTINGTON HARBOUR ~ HUNTINGTON BEACH, CA 92648

mark wheeler
RESIDENTIAL DESIGN
325 ROYCROFT AVENUE
LONG BEACH, CA. 90814
562-519-5465
562-519-3990
562-684-0570

DATE: 4–1–24
SCALE: AS NOTED
DRAWN:MMW
JOB: A–788
SHEET:
A-5.1
OF – SHEETS

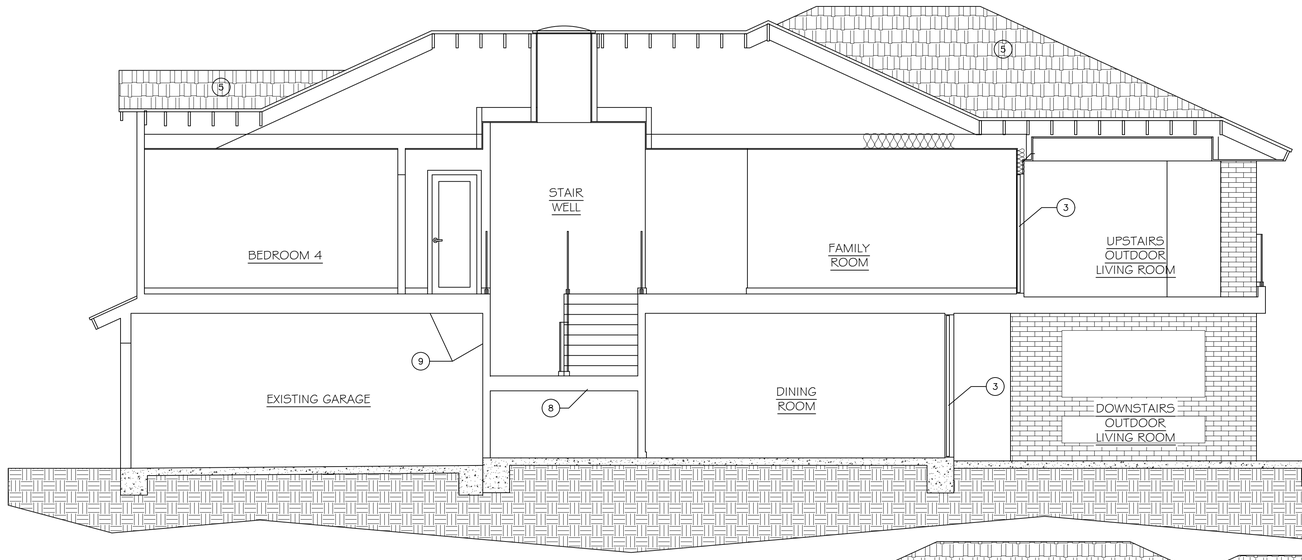

SECTION 'A-A'
PROPOSED

SECTION 'B-B'
PROPOSED

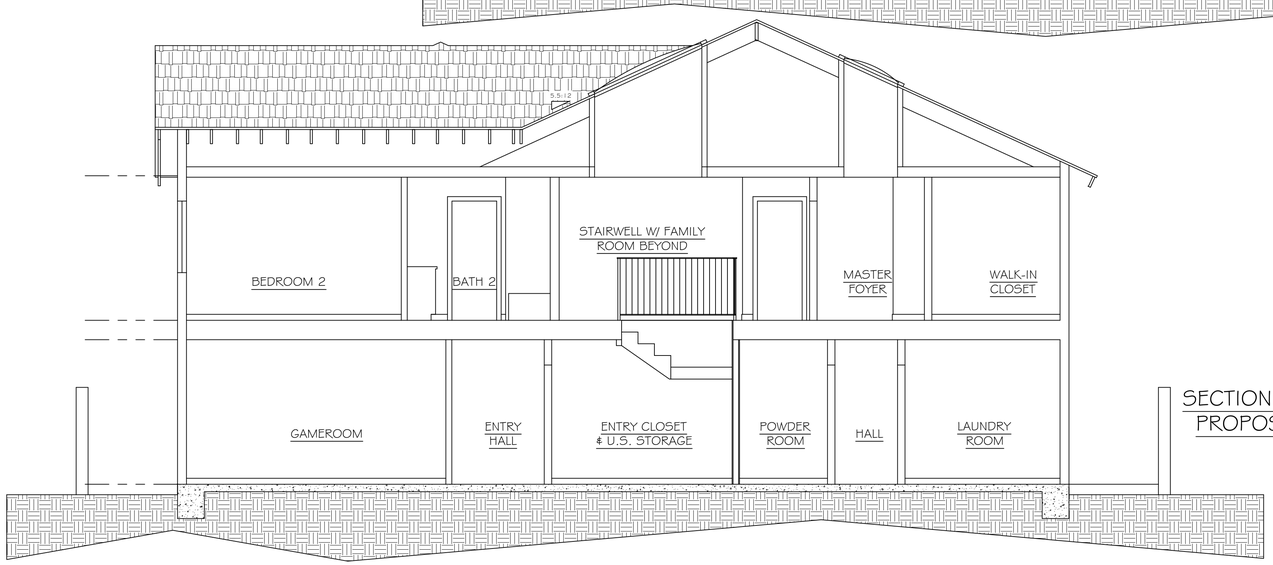

SECTION 'C-C'
PROPOSED

SECTION KEYNOTES

1. SMOOTH COAT STUCCO TO MATCH EXISTING IN COLOR & TEXTURE
2. NEW WINDOWS TO MATCH EXISTING SEE WINDOW SCHEDULE ON SHEET A-3.0 FOR DETAILS
3. NEW DOORS SEE DOOR SCHEDULE ON SHEET A-3.0 FOR DETAILS
4. REFINISH EXISTING GARAGE DOOR.
5. EAGLE--3687--ICC-ES AC180 CONCRETE TILE CLASS-A BROWN GRAY RANGE TO MATCH EXISTING
6. LOCATION OF ELECTRIC PANEL
7. LOCATION OF GAS METER
8. PROVIDE ONE LAYER 3/8" TYPE "X" GYPBOARD UNDER STAIRS
9. PROVIDE ONE LAYER 5/8" TYPE "X" GYPBOARD AT GARAGE WALLS ADJACENT TO LIVING SPACE (GARAGE SIDE ONLY)

INSULATION REQUIREMENTS

WALLS:	13
CEILING/ROOFS:	30
FLOORING:	19

INSULATION AT ALL WALL INTERIOR AND EXTERIOR

SEE STRUCTURAL DRAWINGS FOR EXACT LOCATION OF FRAMING

FIRE BLOCKING IS REQUIRED IN CONCEALED SPACES 10" O.C. HORIZONTAL, VERTICAL AT THE CEILING AND FLOOR LEVELS, CONNECTIONS BETWEEN HORIZONTIAL AND VERTICAL SPACES, CONCEALED SPACES BETWEEN STAIR AND LANDING, OPENINGS AROUND VENTS, PIPES, DUCTS, CABLES, WIRES, CHINMNEYS AND FIREPLACES.

PROPOSED SECTION-ELEVATIONS

SCALE: $\frac{1}{4}$" = 1'-0"

Mark M. Wheeler
April 1, 2024

REVISIONS	–
	–
–	–
–	–

The Cirks Residence
3542 VENTURE DRIVE ~ TRINIDAD ISLAND ~ HUNTINGTON BEACH, 92648

mark wheeler
RESIDENTIAL DESIGN
325 ROYCROFT AVENUE
LONG BEACH, CA. 90814
562-619-3545
562-619-3990
562-684-0570

DATE: 4-1-24
SCALE: 1/4"=1'-0"
DRAWN:
JOB:
SHEET:
A-6.0
OF – SHEETS

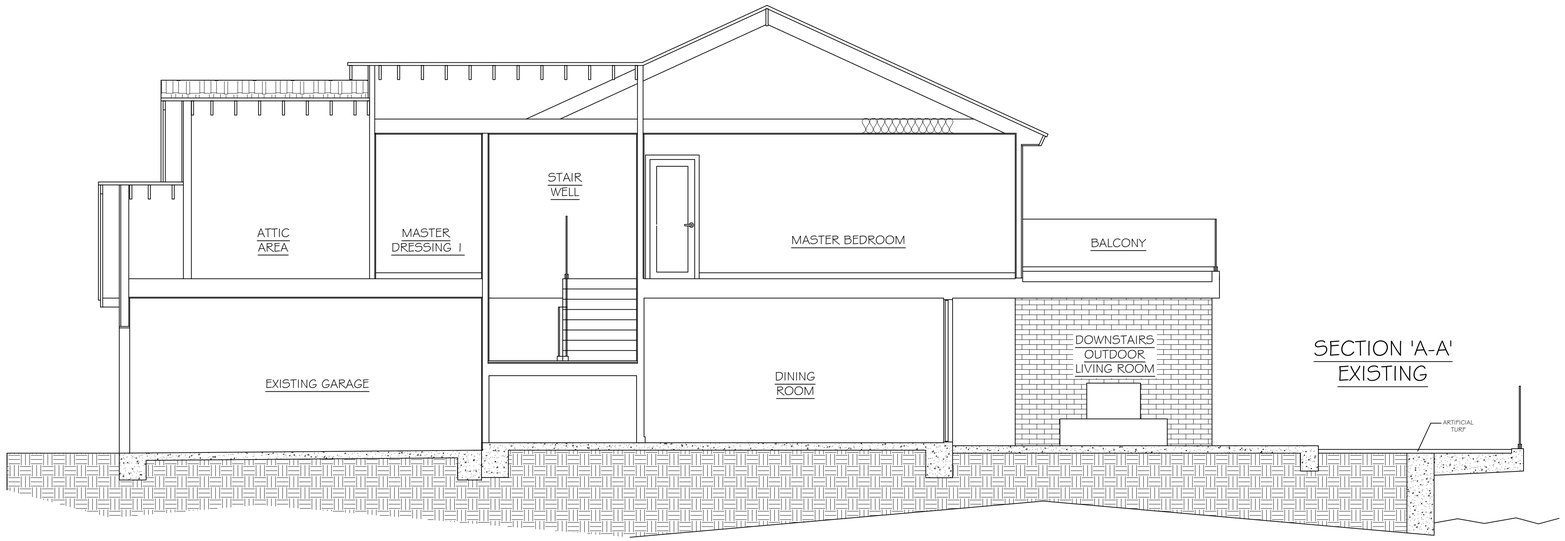

SECTION 'A-A'
EXISTING

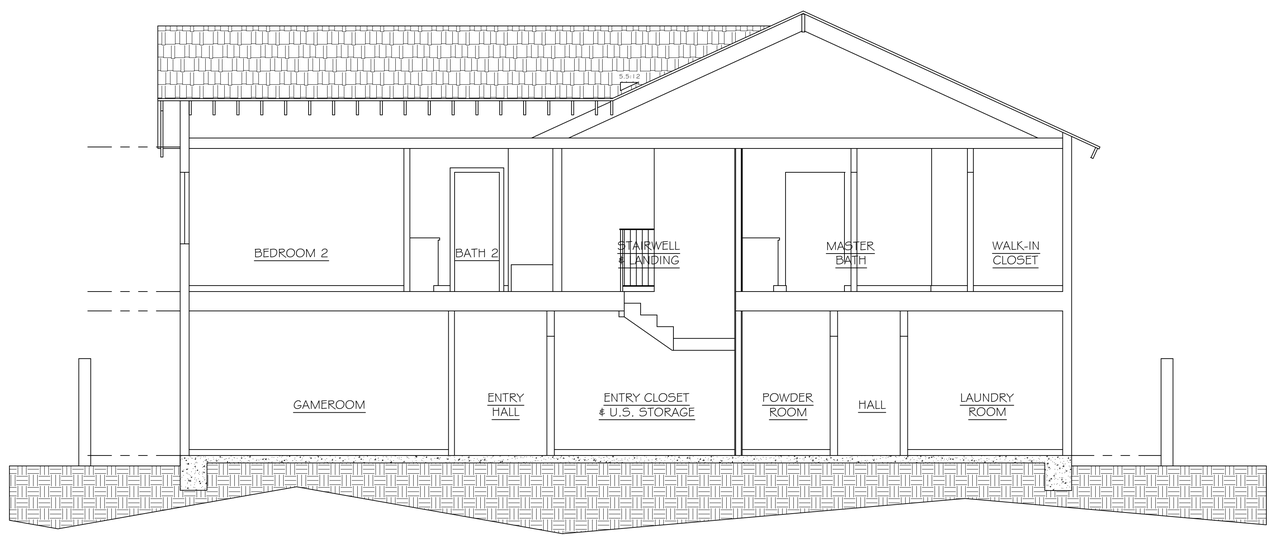

SECTION 'C-C'
EXISTING

Mark M. Wheeler
April 1, 2024

REVISIONS	–
	–
–	–
–	–

The Cirks Residence
3542 VENTURE DRIVE ~ TRINIDAD ISLAND ~ HUNTINGTON BEACH, 92648

mark wheeler
RESIDENTIAL DESIGN
325 ROYCROFT AVENUE
LONG BEACH, CA. 90814
562-985-8465
562-419-3990
562-684-0570

DATE: 4-1-24
SCALE: 1/4"=1'-0"
DRAWN:
JOB:
SHEET:
A-6.1
OF – SHEETS

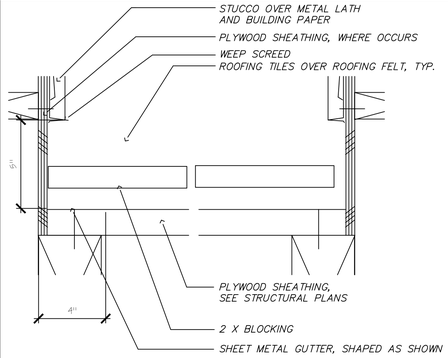

NOT TO SCALE (20) ROOF FLASHING NOT TO SCALE (16)

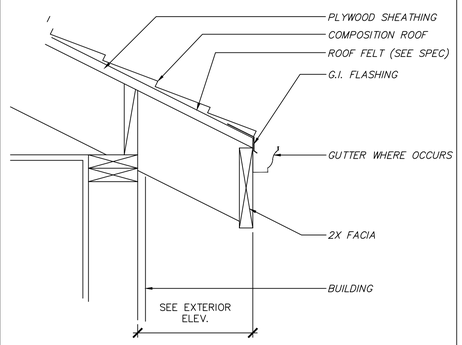

- NOT TO SCALE (19) EAVE DETAIL NOT TO SCALE (15)

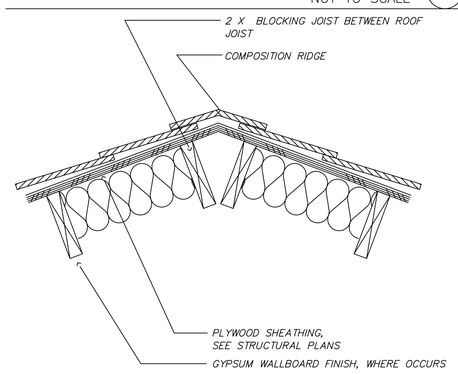

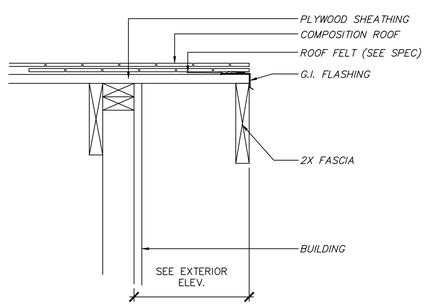

RIDGE NOT TO SCALE (18) RAKE NOT TO SCALE (14)

NOT TO SCALE (17) NOT TO SCALE (13)

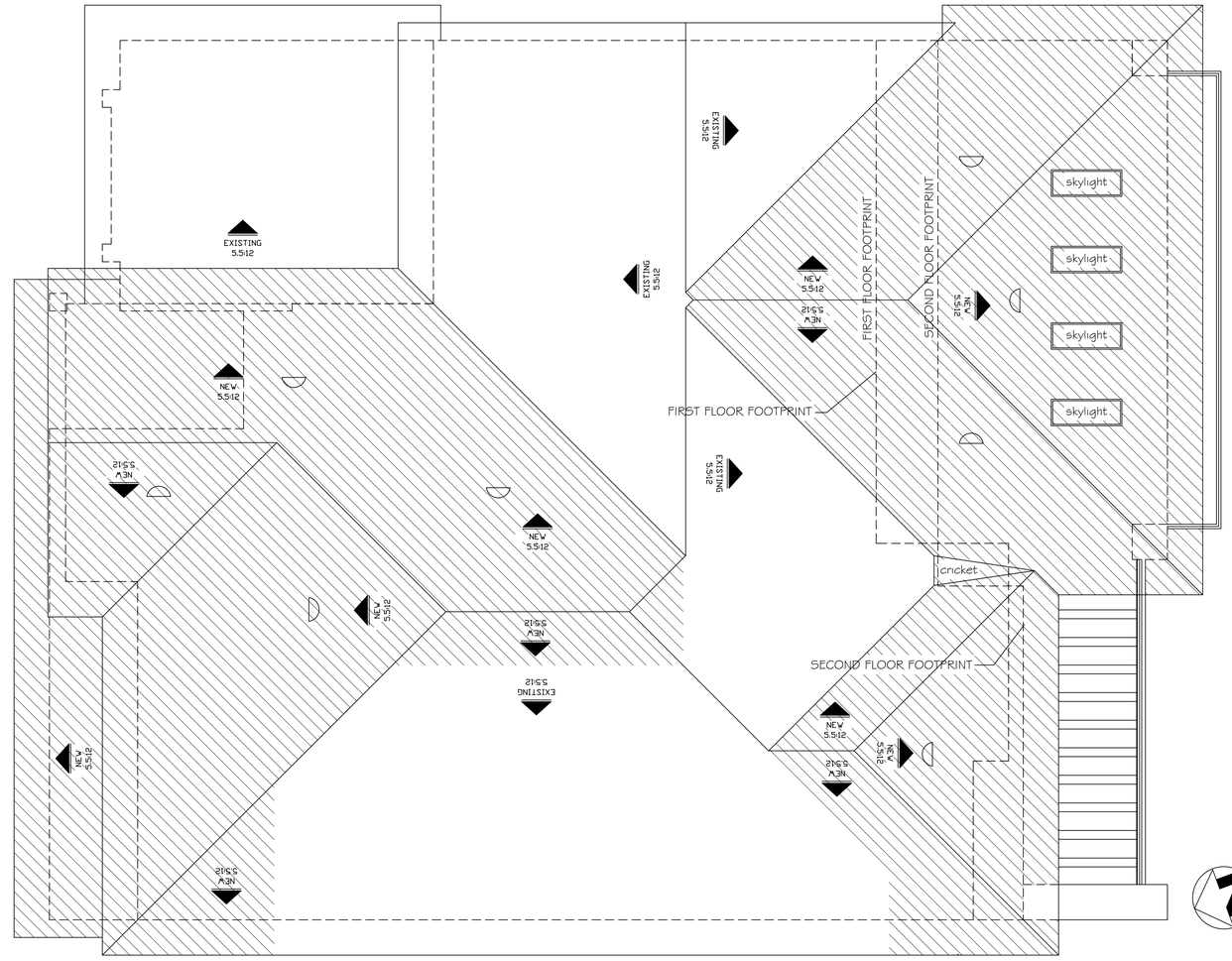

NOT TO SCALE (12) ROOF PLAN SCALE: 1/4" = 1'-0" (3)

GENERAL NOTES

1. PROVIDE ROOF VENTING PER CBC
   VERIFY W/ MANUFACTURER FOR ADDITIONAL REQUIREMENTS

2. ROOFING AT SLOPED FORMS:

   MANUFACTURER: EAGLE--3687--ICC-ES AC180, IAPMO UES-ER-1900
   TYPE: CONCRETE TILE CLASS-A
   COLOR: BROWN GRAY RANGE TO MATCH EXISTING
   UNDERLAYMENT: 2 LAYERS BLDG FELT PER MANUF. RECOMMENDATIONS
   SLOPE: 5.5:12 TO MATCH EXISTING

3. EAVE CONDITONS

   EAVE AT SLOPE ROOF:

   RAKE: 12" OVERHANG TO MATCH EXISTING (SEE PLAN)
   EAVE: 24" OVERHANG TO MATCH EXISTING (SEE PLAN)

LEGEND

AREA OF NEW SLOPED ROOF

1 SQUARE FOOT DORMER VENT
OPENINGS SHALL HAVE CORROSION-RESISTANT
WIRE MESH WITH 1/16"-1/4"OPENINGS.

ATTIC VENTING -

NEW ATTIC AREA--2ND FLOOR: APPROX 885 SF.
1 SQ.FT. OF VENTILATION FOR EVERY 150 S.F. OF ATTIC AREA.
5.9 S.F. VENTILATION REQUIRED.

6 VENTS PROVIDED @ 1 S.F. EACH = 6 S.F.

Mark M. Wheeler
April 1, 2024

NOT TO SCALE (1) ROOF GENERAL NOTES

REVISIONS	-
	-
-	-
-	-

The Cirks Residence
3542 VENTURE DRIVE ~ TRINIDAD ISLAND ~ HUNTINGTON BEACH, 92648

mark wheeler
RESIDENTIAL DESIGN
325 ROYCROFT AVENUE
LONG BEACH, CA. 90814
562-985-5465
562-419-3990
562-684-0570

DATE: 4-1-24
SCALE: 1/4"=1'-0"
DRAWN:
JOB:
SHEET: A-7.0
OF - SHEETS

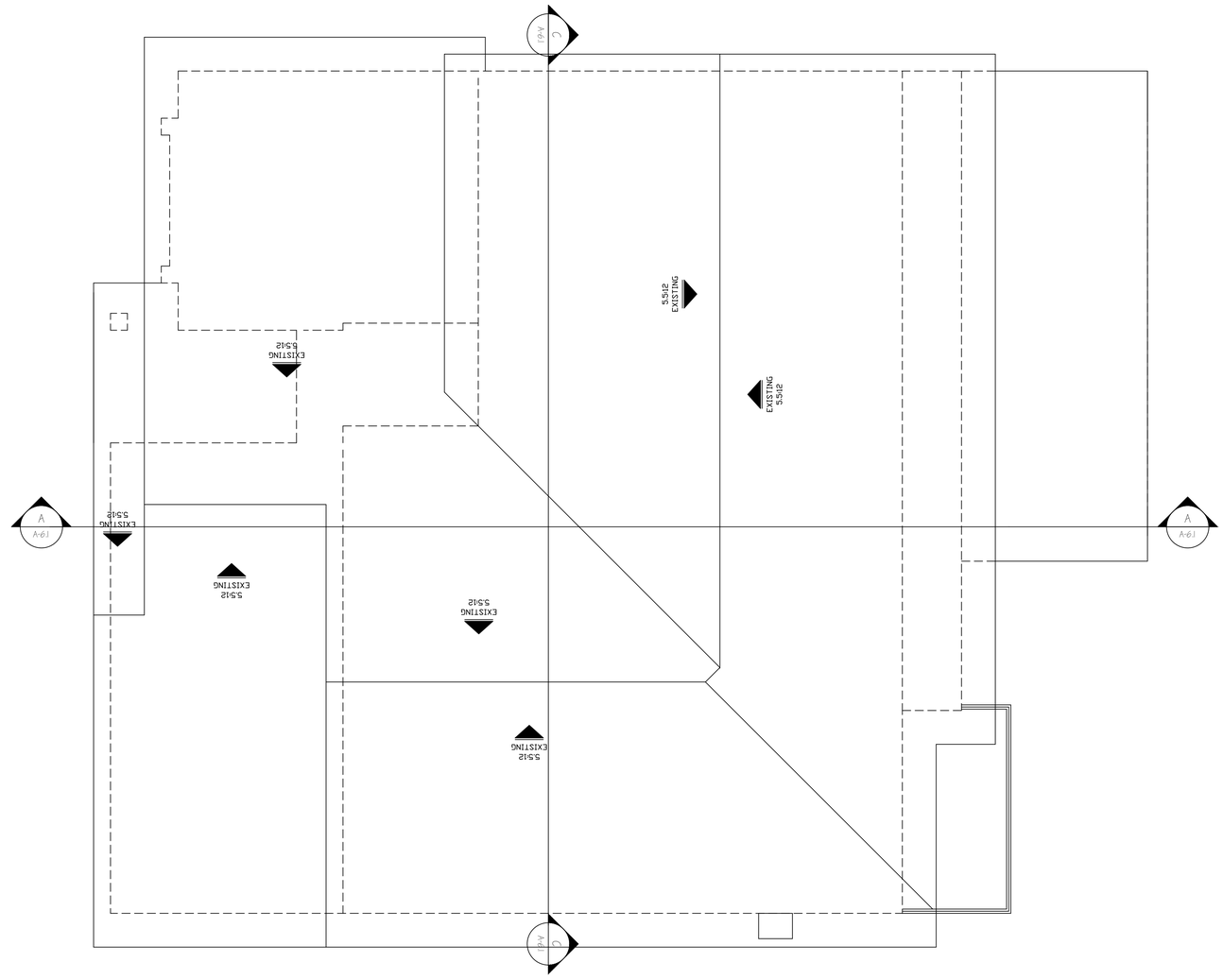

EXISTING ROOF PLAN

SCALE:
1/4" = 1'-0" 3

Mark M. Wheeler
April 1, 2024

REVISIONS	–
	–
–	–
–	–

The Cirks Residence

3542 VENTURE DRIVE ~ TRINIDAD ISLAND ~ HUNTINGTON BEACH, 92648

mark wheeler
RESIDENTIAL DESIGN
325 ROYCROFT AVENUE
LONG BEACH, CA. 90814
562-515-565
562-619-3990
562-684-0570

DATE: 4-1-24
SCALE: 1/4"=1'-0"
DRAWN:
JOB:
SHEET:
A-7.1
OF – SHEETS

ITEM NO.	PART NUMBER	DESCRIPTION	QTY.
1	03-009-01	BASE PLATE	2
2	03-001-01	TERMINAL POST (6005 TS ALUM.)	2
3	03-004-01	RECTANGULAR TOP RAIL (6082 T6 ALUM.)	1
4	03-006-01	TOP RAIL SNAP COVER (6082 T6 ALUM.)	1
5	03-005-01	RECTANGULAR RAIL END	1
6	Mirror03-005-01	RECTANGULAR RAIL END (ADC12 ALUM.)	1
7	01-008S-01 OR 01-028S-01	FIELD THREADED TERMINAL	13
8	01-0008-01 OR 01-028-01	FIELD THREADED TENSIONER	13
9	Stainless Cable	1/8" or 3/16" DIA.	13
10	Stainless Washer	STD	26
11	Stainless Hex Nut	STD	26
12	Stainless Acorn Nut	STD	26
13	6-32 SS TYPE	STD	4
14	1/4-20x2 1/2 PHIL FH T/F 410 SS	STD	8
15	LAG BOLT	STD	8

*NOTE:
GUARDRAIL SHALL WITHSTAND 200 LBS PER LINEAL FT. AT RIGHT ANGLE TO THE TOP OF THE RAIL

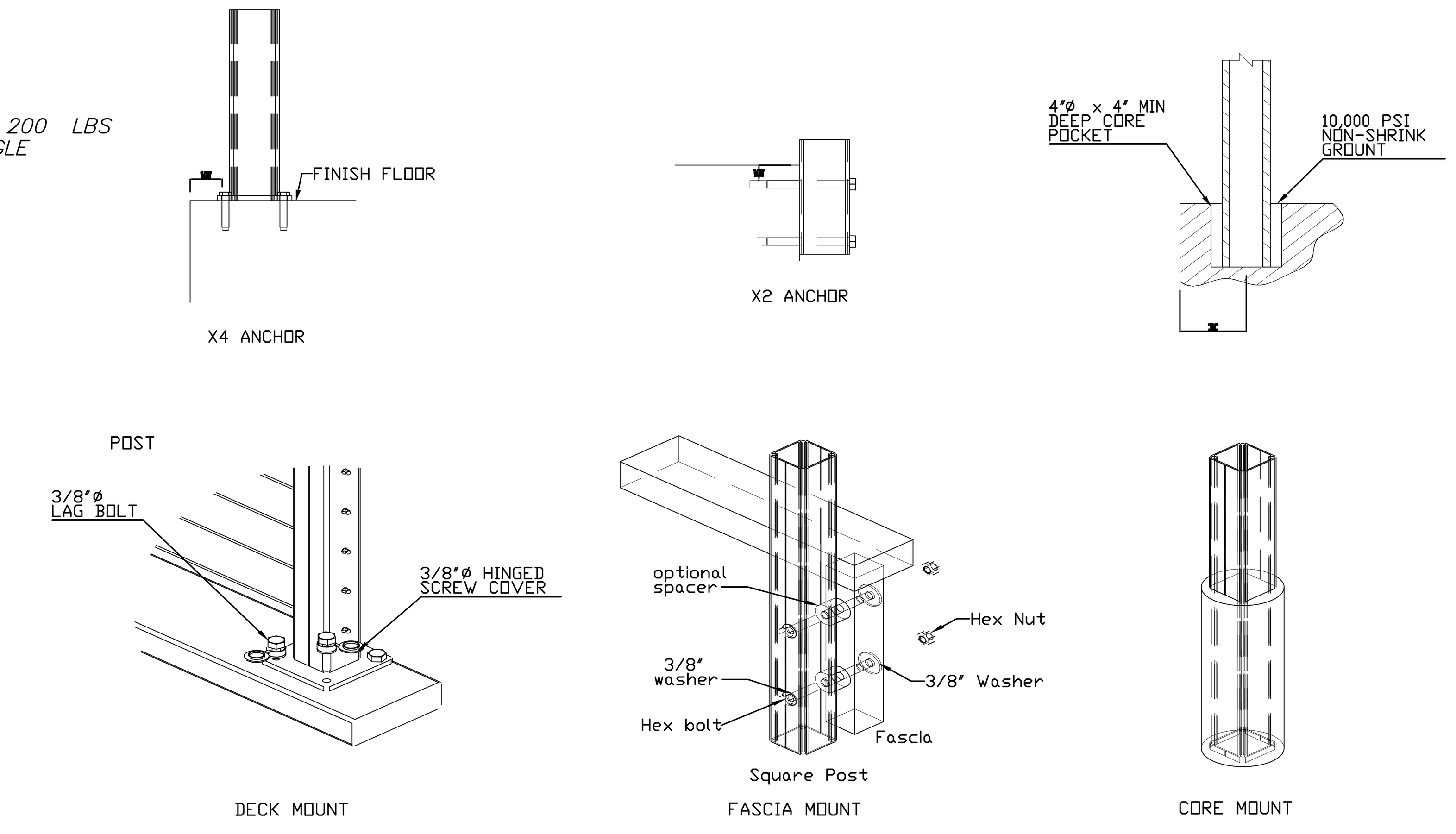

TYPICAL MOUNTING OPTIONS

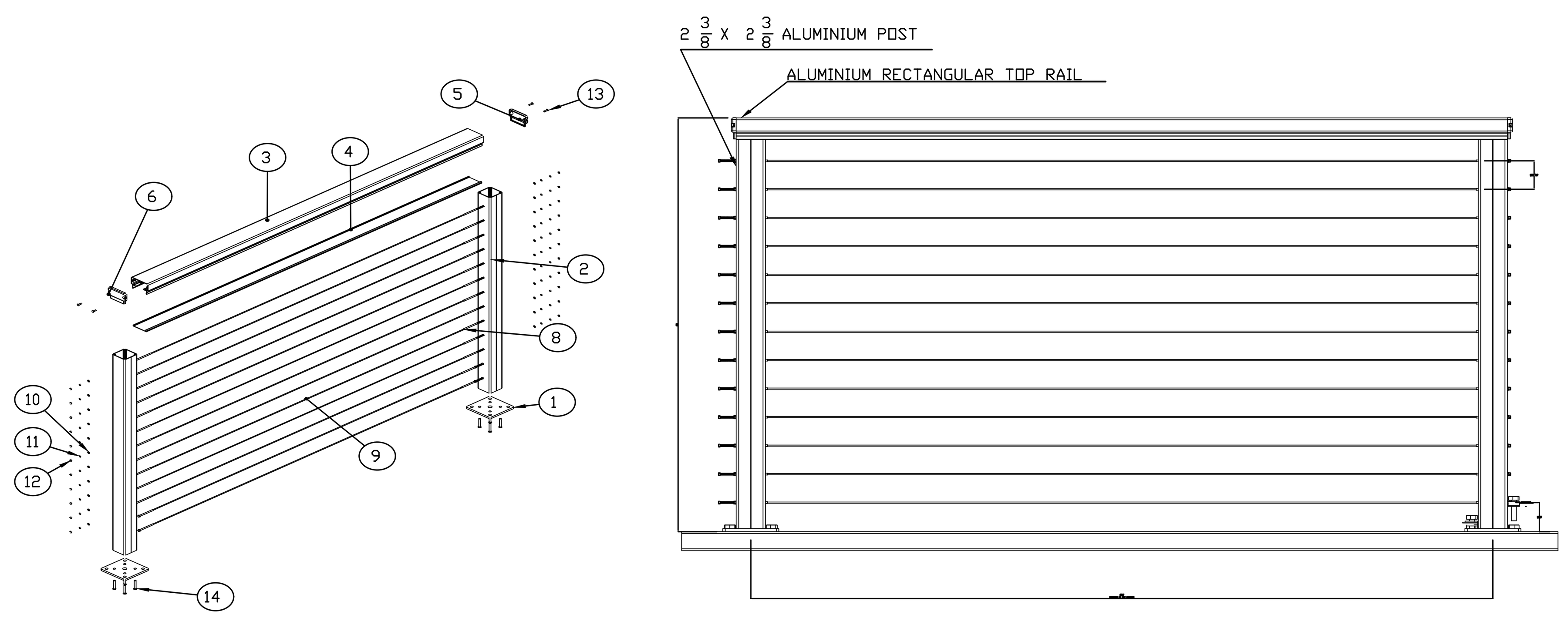

LEVEL 42" STANDARD GUARD RAILING

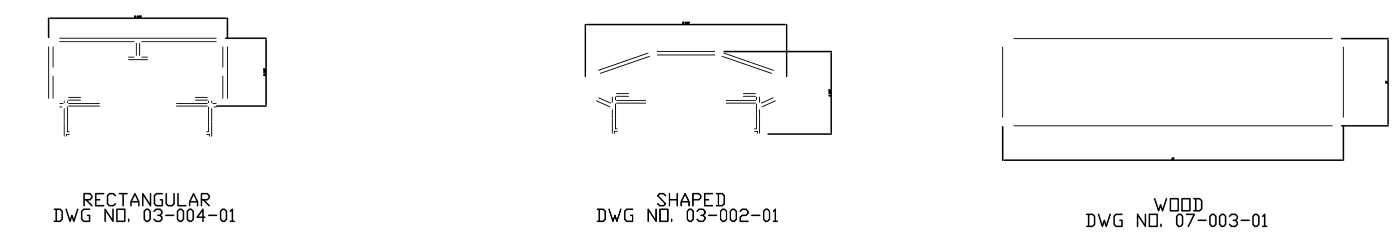

TOP RAIL OPTIONS

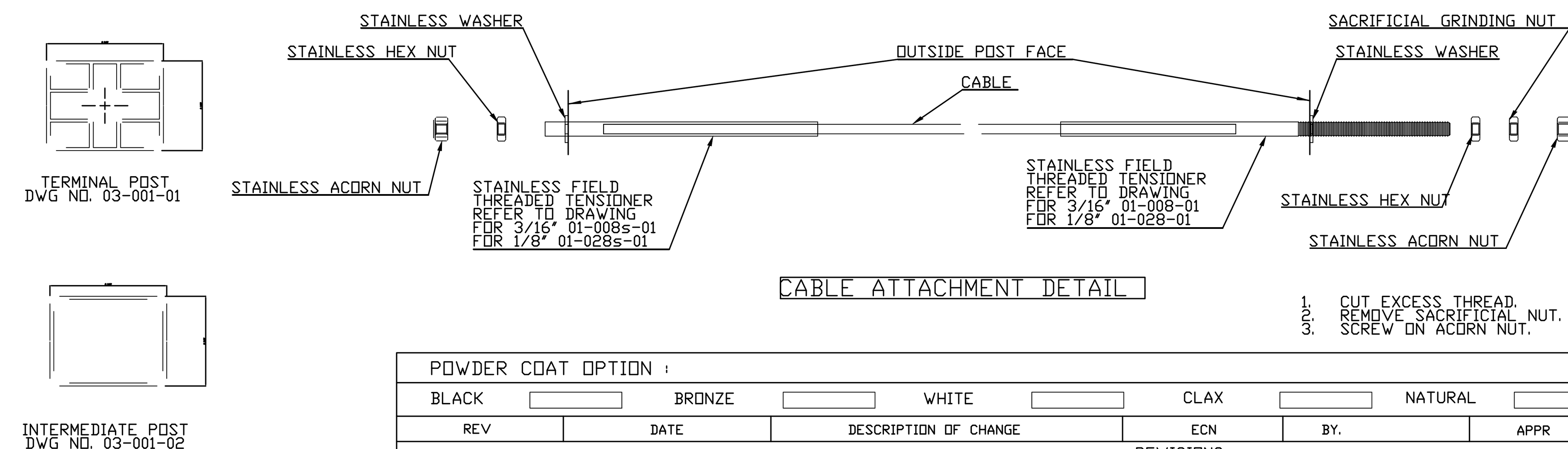

CABLE ATTACHMENT DETAIL

1. CUT EXCESS THREAD.
2. REMOVE SACRIFICIAL NUT.
3. SCREW ON ACORN NUT.

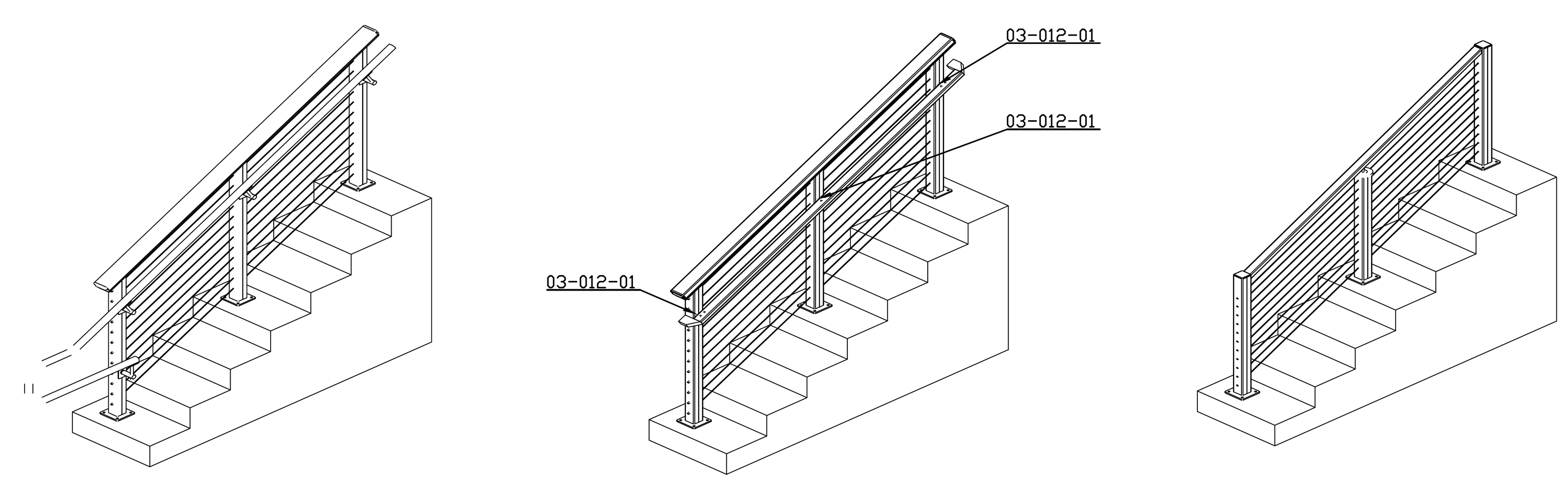

STAINLESS STEEL HAND RAIL

POST-TO-POST STAND ALONE HAND RAIL

POST-TO-POST STAIR HAND RAIL

STAIRS 42" STANDARD GUARD RAILING

POWDER COAT OPTION :									
BLACK		BRONZE		WHITE		CLAY		NATURAL	

REV	DATE	DESCRIPTION OF CHANGE	ECN	BY.	APPR
REVISIONS					

Stainless Cable & Railing

TOLERANCES .XX ±.01 .XXX ±.005 ANGULAR ±0.5° FRACTIONAL ±1/32 UNLESS OTHERWISE SPECIFIED

THIS DRAWING IS THE PROPERTY OF STAINLESS CABLE & RAILING AND IS PROTECTED UNDER COPYRIGHT LAW AS AN UNPUBLISHED WORK. IT MAY NOT BE PUBLISHED/COPIED OR REPRODUCED WITHOUT EXPRESS WRITTEN PERMISSION FROM SC&R

TITLE : CABLEVIEW ® ALUMINIUM 42" RAILING

DRAWN BY. PA | DATE ** | PROJECT ** | DRG NO. CV-A42 | SHEET 1 OF 1

3 CABLE HANDRAIL DETIALS

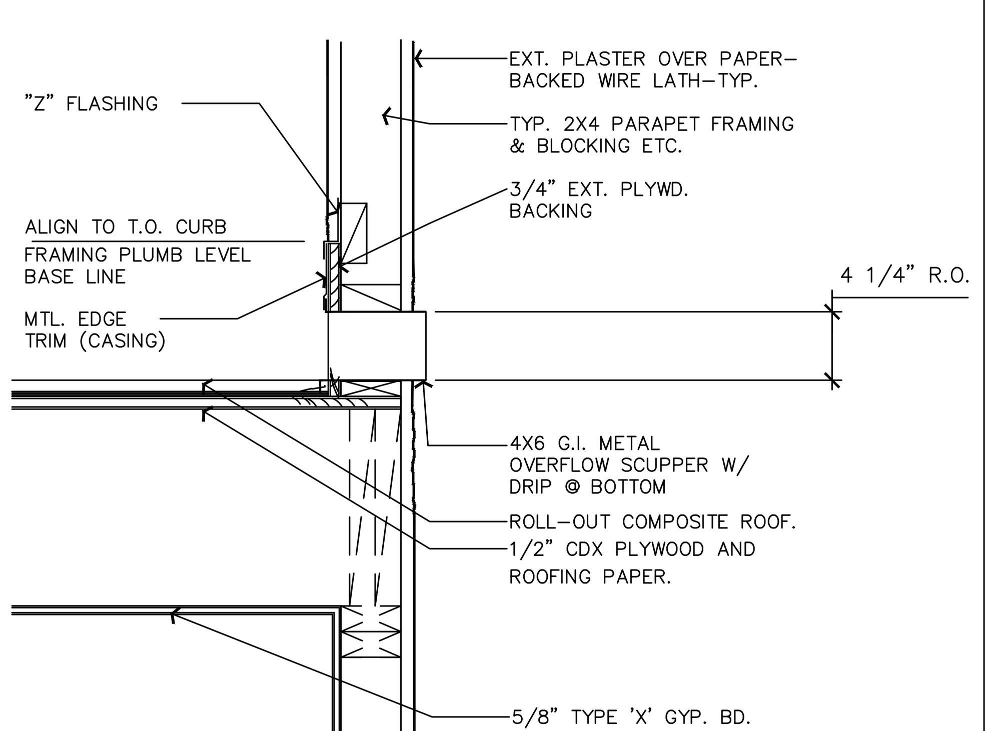

DRAINAGE/PARAPET NOT TO SCALE 9

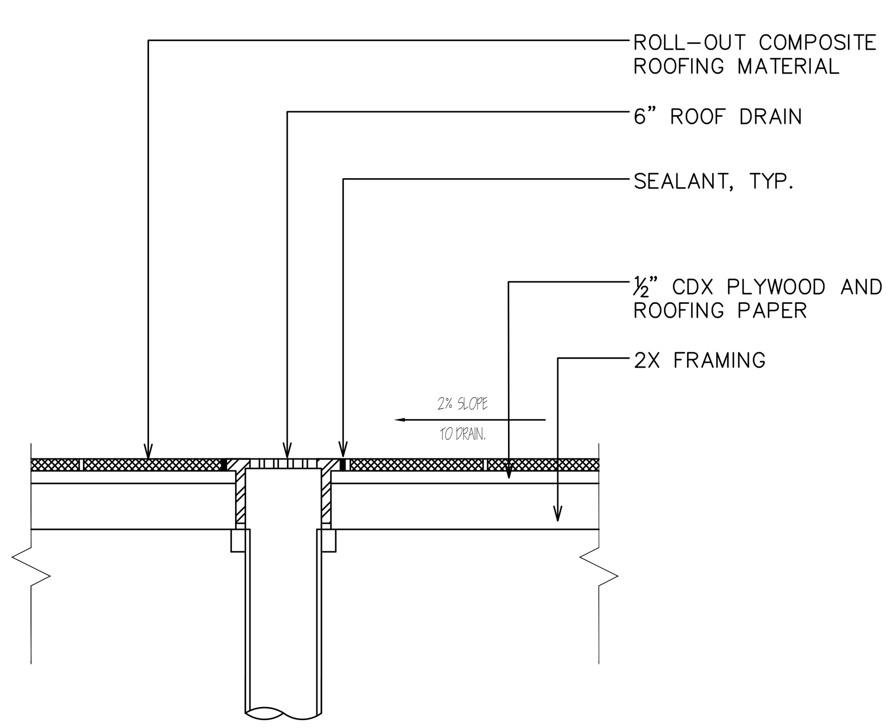

ROOF DRAIN NOT TO SCALE 8

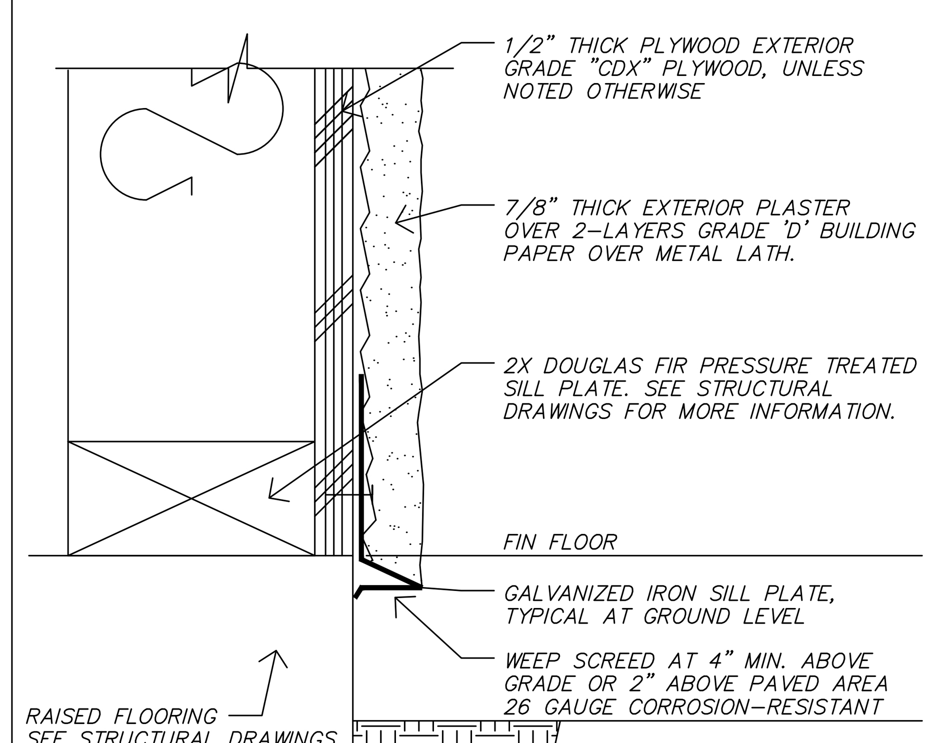

FTG. WATERPROOFING SCALE 3"=1'-0" 7

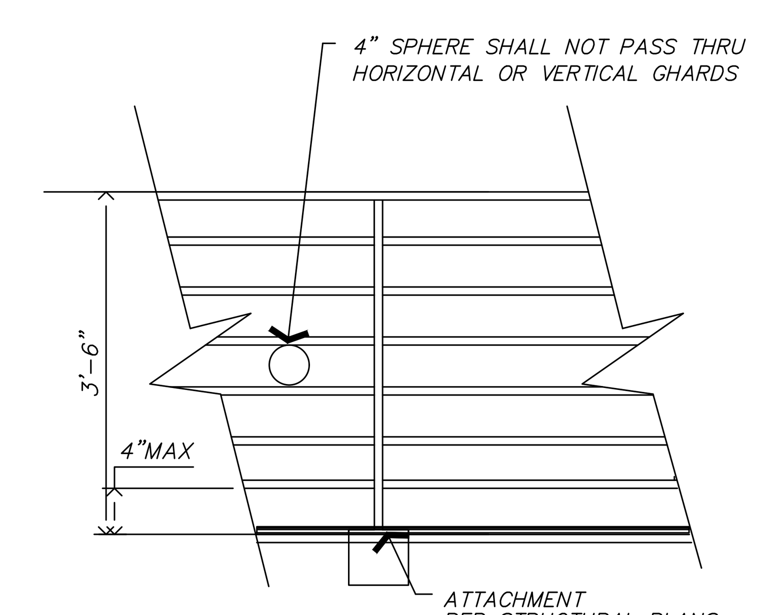

GUARDRAIL SCALE N.T.S. 5

Mark M. Wheeler
April 1, 2024

REVISIONS

The Cirks Residence
3542 VENTURE DRIVE ~ TRINIDAD ISLAND ~ HUNTINGTON BEACH, 92648

325 ROYCROFT AVENUE
LONG BEACH, CA. 90814
562-856-5665
562-619-3990
562-684-0570

mark wheeler
RESIDENTIAL DESIGN

DATE: 4-1-24
SCALE: 1/4"=1'-0"
DRAWN:
JOB:
SHEET: A-8.0
OF – SHEETS

GENERAL NOTES:

GENERAL

1. ALL CONSTRUCTION AND WORKMANSHIP SHALL CONFORM TO THE 2022 CBC. NOTE ALL REFERENCES ON PLANS TO THE SECTIONS AND TABLES WITHIN THE LATEST BUILDING CODE.
2. THESE NOTES SHALL BE USED IN CONJUNCTION WITH THE PLANS AND ANY DISCREPANCIES SHALL BE BROUGHT TO THE ATTENTION OF THE ARCHITECT AND THE ENGINEER OF RECORD.
3. CONTRACTOR IS RESPONSIBLE TO CHECK DIMENSIONS, FRAMING CONDITIONS, AND SITE CONDITIONS PRIOR TO STARTING WORK. ARCHITECT AND ENGINEER SHALL BE NOTIFIED IMMEDIATELY OF ANY DISCREPANCIES OR POSSIBLE DEFICIENCIES.
4. CONDITIONS NOT SPECIFICALLY DETAILED SHALL BE CONSTRUCTED AS SPECIFIED IN TYPICAL DETAILS FOR THE RESPECTIVE MATERIALS.
5. DRAWINGS AND SPECIFICATIONS REPRESENT THE FINISH STRUCTURE. ALL BRACING, TEMPORARY SHORING, ETC. ARE THE SOLE RESPONSIBILITY OF THE CONTRACTOR. OBSERVATION VISITS BY THE ARCHITECT OR ENGINEER DO NOT INCLUDE INSPECTION OF CONSTRUCTION PROCEDURES. THE CONTRACTOR IS SOLELY RESPONSIBLE FOR ALL CONSTRUCTION METHODS AND FOR THE SAFETY AT THE WORKSITE.
6. SEE ARCHITECTURAL, MECHANICAL, AND ELECTRICAL DRAWINGS FOR SLAB DEPRESSIONS, ROOF OPENINGS, TRENCHES, SOFFITS, ETC. NOT SHOWN ON STRUCTURAL DRAWINGS. ANY AMBIGUOUS DISCREPANCIES AMONGST THESE DRAWINGS SHALL BE BROUGHT TO THE ATTENTION OF THE ARCHITECT AND ENGINEER.
7. CONTRACTOR SHALL INVESTIGATE JOB SITE DURING EARTHWORK OPERATIONS AND NOTIFY ENGINEER OF ANY CESSPOOLS, CISTERNS, BURIED FOUNDATION, ETC. ARE FOUND.
8. TEMPORARY LOADING OF MEMBERS SHALL BE SPREAD OUT UNIFORMLY AS TO NOT EXCEED THE SPECIFIED DESIGN LIVE LOAD PER SQUARE FOOT.
9. DRAWINGS AND CALCULATIONS THAT ARE NOT SEALED WITH A "WET SIGNATURE" SHALL NOT BE USED FOR CONSTRUCTION DOCUMENTS.
10. THE SLAB ON GRADE IS A NON-STRUCTURAL ITEM AND THEREFORE HAS NOT BEEN DESIGNED BY THE STRUCTURAL DESIGN ENGINEER. ISSUES RELATING TO MOISTURE MIGRATION, CRACKING, AND DIFFERENTIAL SETTLEMENT OF THE SLAB ON GRADE HAS NOT BEEN ADDRESSED BY THE ENGINEER. OWNER AND CONTRACTOR ASSUME FULL RESPONSIBILITY FOR ITEMS RELATING TO SLAB ON GRADE.

WOOD FRAMING

1. ALL WOOD STRUCTURAL SHEATHING(ROOF SHEATHING) TO BE PER DOC PS1 OR DOC PS2 OR ANSI/APA PRP210. SEE ADDITIONAL NOTES FOR STRUCTURAL SHEATHING UNDER 'LATERAL SHEAR NOTES' ON THIS SHEET.
   ALL STRUCTURAL LUMBER SHALL BE DOUGLAS FIR-LARCH PER DOC PS20 WITH A MAXIMUM MOISTURE CONTENT OF 19% AT TIME OF WRAPPING AND SHALL BE THE FOLLOWING GRADES UNLESS NOTED OTHERWISE:

PLATES, BLOCKING .....STD GRADE OR BETTER
STUDS UP TO 10'-0" IN HEIGHT .....STUD GRADE OR BETTER
STUDS OVER 10'-0" IN HEIGHT .....NO. 2
2X RAFTERS AND JOISTS .....NO. 2

BEAMS AND STRINGERS:
4X10 AND SMALLER .....NO. 2
4X12 AND LARGER .....NO. 1
6X AND 8X .....NO. 1

4X4 POSTS AND HEADERS .....STD OR BETTER
POSTS AND TIMBERS .....NO. 1

2018 NDS STRESS VALUES FOR DOUGLAS FIR-LARCH:
single/repetitive
2X4 #2: Fb = 1350/1552 psi ; fv = 180 psi ; E = 1.6x10^6
2X6 #2: Fb = 1170/1345 psi
2X8 #2: Fb = 1080/1242 psi
2X10 #2: Fb = 990/1138 psi
2X12 #2: Fb = 900/1150 psi
2X14 #2: Fb = 810/931 psi
4X6,8 #2: Fb = 1170 psi
4X10 #2: Fb = 1080 psi
4X12 #1: Fb = 1265 psi
4X14 #1: Fb = 1150 psi
4X16 #1: Fb = 1150 psi
6X10 #1: Fb = 1350 psi
6X12 #1: Fb = 1350 psi

2. ALL WOOD BEARING ON CONCRETE SHALL BE PRESSURE TREATED DOUGLAS FIR.
3. BOLT HOLES IN WOOD SHALL BE A MAXIMUM OF 1/32" TO 1/16" LARGER THAN THE NOMINAL BOLT DIAMETER.
4. ALL EXTERIOR WALLS TO BE SECURED WITH 5/8" DIAMETER X 12" LONG ANCHOR BOLTS @ 72" o.c. U.N.O.
5. ALL INTERIOR NON-BEARING WALLS TO BE SECURED WITH SHOT PINS PER MANUFACTURER'S SPECIFICATIONS, U.N.O. RECOMMEND RAMSET/REDHEAD 1516SD @ 24" o.c.
6. ALL NUTS AND BOLTS SHALL BE RE-TIGHTENED PRIOR TO APPLYING DRYWALL, SHEATHING, STUCCO, ETC.
7. EXTERIOR ISOLATED WOOD COLUMNS AND POSTS SUPPORTED BY A CONCRETE SLAB SHALL BE A MINIMUM OF 8" ABOVE THE ADJACENT EXPOSED EARTH AND AT LEAST 1" ABOVE SLAB ON A METAL POST BASE.(EXCEPTION: POSTS OR COLUMNS OF APPROVED WOOD WITH NATURAL RESISTANCE TO DECAY OR TREATED WOOD).
8. ALL HARDWARE TO BE SIMPSON STRONG-TIE COMPANY. ALTERNATIVES TO HARDWARE MUST BE APPROVED IN WRITING BY THE ENGINEER PRIOR TO INSTALLATION.
9. OK TO SUBSTITUTE CC IN LIEU OF CCQ FOR COLUMN CAPS. OK TO SUBSTITUTE CB IN LIEU OF CBQ FOR COLUMN BASES.
10. ALL HOLD DOWNS, POST BASES, AND COLUMN BASES SHALL BE ATTACHED TO A 4X4 POST MINIMUM.
11. ALL ISOLATED POSTS AND BEAMS TO HAVE SIMPSON PB's, PC's and/or BC's MINIMUM, U.N.O.
12. ALL SHOP DRAWINGS ARE TO BE REVIEWED BY THE CONTRACTOR AND THE ARCHITECT PRIOR TO SUBMITTAL FOR THE ENGINEERS REVIEW.
13. PLYWOOD FLOOR AND ROOF SHEATHING SHALL BE LAID CONTINUOUS OVER TWO OR MORE JOIST BAYS WITH FACE GRAIN PERPENDICULAR TO SUPPORTS. STAGGER ALL PLYWOOD PANELS 4'.
14. ALL NAILING TO BE PER TABLE 2304.10.2 OF THE 2022 CALIFORNIA BUILDING CODE, U.N.O.
15. ALL EXTERIOR WALLS ADJACENT TO VAULTED CEILINGS SHALL BE BALLOON FRAMED WITH CONTINUOUS STUDS TO THE BOTTOM CHORD OF TRUSS OR RAFTER.
16. ALL STUD WALLS TO BE FRAMED WITH STUDS @ 16" o.c. MAX., U.N.O. DOUBLE 2X TOP PLATES TO BE USED WITH A MINIMUM LAP SPLICE OF 48". PROVIDE ALL PLATE SPLICES WITH A MINIMUM OF (10)16d NAILS, U.N.O. TOP PLATE BREAKS SHALL OCCUR OVER A STUD.
17. PROVIDE 2X4 FLAT HEADERS AT ALL INTERIOR NON-BEARING OPENINGS UP TO 36" IN WIDTH AND 4X4 HEADERS FOR OPENINGS 3 TO 6 FEET IN WIDTH.
18. INSTALL FIRE BLOCKS TO CUT OFF HORIZONTAL AND VERTICAL DRAFT OPENINGS BETWEEN TWO STORIES AND ROOF ATTIC SPACES. FIRE BLOCKS SHALL BE OF 2" NOMINAL THICKNESS. LOCATION OF FIRE BLOCKS SHALL INCLUDE:
    A. STUD WALLS WITH DROPPED CEILINGS/SOFFITS.
    B. AROUND STAIR LANDINGS AND STRINGERS WHERE ADJACENT TO STUD WALL.
19. APPLY SHEAR PANEL PRIOR TO BOX-OUTS, PERPENDICULAR WALLS, AND SIMILAR FRAMING THAT MAY INTERRUPT THE CONTINUITY OF THE PLYWOOD. MAXIMUM 6" SQUARE WITHIN A SHEAR WALL IS ALLOWABLE WHILE LARGER OPENINGS WITHIN A SHEAR WALL MUST BE APPROVED WITH PROPER DETAILING FROM THE ENGINEER UNLESS ALREADY DETAILED ON THE DRAWINGS.
20. PROVIDE FULL DEPTH BLOCKING BETWEEN JOISTS AT ALL BEARING LOCATIONS.
21. ALL ROUGH SAWN, HEAVY TIMBER, AND EXPOSED BEAMS TO BE FREE OF HEART CENTER.
22. ALL HANGING 2X JOISTS TO BE SUPPORTED WITH "LUS" HANGERS MINIMUM, U.N.O. ALL HANGING TJI'S TO BE SUPPORTED WITH "ITT" HANGERS MINIMUM, U.N.O.

NAILS/HARDWARE

1. ALL NAILING TO BE PER TABLE 2304.10.2 OF THE 2022 CALIFORNIA BUILDING CODE, U.N.O.
2. ALL FLOOR SHEATHING, ROOF SHEATHING, AND SHEAR PANELS SHALL BE CONSTRUCTED WITH COMMON NAILS U.N.O.
3. FLOOR SHEATHING, ROOF SHEATHING, AND SHEAR PANEL SHALL HAVE NAIL HEADS FLUSH WITH OUTER MEMBRANE OF MATERIAL. NAIL GUNS MUST BE EQUIPPED WITH A FLUSH NAILER WHILE FASTENING STRUCTURAL SHEATHING.
4. EDGE NAILING OF STRUCTURAL SHEATHING SHALL BE 3/8" FROM THE EDGE. FIELD NAILING AND BOUNDARY NAILING SHALL BE PLACED WITHIN THE CENTER OF THE MEMBER BELOW THE SHEATHING.
5. ALL HARDWARE TO BE INSTALLED PER MANUFACTURER'S RECOMMENDATIONS.
6. FASTENERS FOR PRESERVATIVE TREATED AND FIRE-RETARDANT-TREATED WOOD SHALL BE OF HOT DIPPED ZINC-COATED GALVANIZED STEEL, STAINLESS STEEL, SILICON BRONZE OR COPPER. THE COATING WEIGHTS FOR ZINC-COATED FASTENERS SHALL BE IN ACCORDANCE WITH ASTM A 153.

STRUCTURAL STEEL

1. ALL FABRICATION AND ERECTION SHALL CONFORM TO THE LATEST EDITION OF THE AISC MANUAL OF STEEL CONSTRUCTION.
2. ALL STRUCTURAL STEEL SHALL BE FABRICATED IN THE SHOP OF A LICENSED FABRICATOR AND ALL SHOP DRAWINGS SHALL BE SUBMITTED TO ARMSTRONG ENGINEERING FOR APPROVAL PRIOR TO FABRICATION. FABRICATOR SHALL SUBMIT SHOP DRAWINGS TO THE GENERAL CONTRACTOR AND OWNER FOR REVIEW PRIOR TO FABRICATION. ANY PROPOSED DEVIATION OR CHANGE SHALL BE CLEARLY NOTED ON THE SHOP DRAWINGS. STEEL FABRICATOR SHALL FIELD CHECK ALL DIMENSIONS PRIOR TO ERECTION TO PROVIDE PROPER FIT. ALL FIELD WELDING SHALL BE CONTINUOUSLY INSPECTED BY AN APPROVED WELDING INSPECTOR.
3. ALL STEEL EXPOSED TO WEATHER SHALL BE HOT-DIPPED GALVANIZED AFTER FABRICATION.
4. ALL FULL PENETRATION GROOVE WELDS SHALL BE ULTRASONICALLY TESTED FOR THE EXTENT REQUIRED PER THE CURRENT EDITION OF THE CALIFORNIA BUILDING CODE.
5. ALL STRUCTURAL STEEL SHALL CONFORM TO ASTM A36.
6. ANCHOR BOLTS AND UNFINISHED BOLTS SHALL CONFORM TO ASTM A307.
7. ALL ROUND PIPE SHALL CONFORM TO ASTM A53 GRADE "B" (TYPE E OR S).
8. ALL SQUARE AND RECTANGULAR TUBE SHALL CONFORM TO ASTM A500 OR A501.
9. WHERE FINISH IS ATTACHED TO STRUCTURAL STEEL, PROVIDE 1/2" DIA. BOLT HOLES AT 4'-0" O.C. FOR ATTACHMENT OF NAILER. 1/2" DIA. x 3" CPL NELSON STUDS MAY REPLACE BOLTS.

CONCRETE

1. ALL CONCRETE SHALL CONFORM TO THE LATEST EDITION OF THE CALIFORNIA BUILDING CODE.
2. ALL CONCRETE SHALL ATTAIN A MINIMUM COMPRESSIVE STRENGTH OF 2500 PSI AT 28 DAYS UNLESS NOTED OTHERWISE.
3. AGGREGATES SHALL BE NATURAL SAND AND ROCK CONFORMING TO ASTM C33.
4. CEMENT SHALL BE PORTLAND CEMENT CONFORMING TO ASTM C150, AS REQUIRED TO SATISFY SITE SOIL CONDITIONS AS DETERMINED BY THE PROJECTS SOIL ENGINEER.
5. DRY PACK SHALL BE COMPOSED OF ONE PART PORTLAND CEMENT TO NOT MORE THAN THREE PARTS SAND.
6. ALL SLAB-ON-GRADE (NON POST-TENSION) .....F'c = 2500 psi
   ALL CONTINUOUS FOOTINGS AND PADS .....F'c = 2500 psi
NOTE: WHEN CONCRETE EXPOSED TO SULFATES, STRUCTURAL CONCRETE TO HAVE F'c = 4500psi WITH WATER/CEMENT RATIO = 0.45 WITH TYPE-V CEMENT.
7. REFER TO ARCHITECTURAL DRAWINGS FOR REVEALS, ITEMS REQUIRED TO BE CAST INTO THE CONCRETE, CURBS AND SLAB DEPRESSIONS.
8. REFER TO ARCHITECTURAL DRAWINGS FOR LOCATIONS OF EXPANSION JOINTS.
9. CONCRETE FOR SLAB ON GRADE SHALL HAVE A MAXIMUM OF 4" OF SLUMP PER ASTM C143. 5 SACKS OF CEMENT PER CUBIC YARD OF CONCRETE. CEMENT ASTM C150 TYPE 1 OR 2.
10. ANCHOR BOLTS, HOLD DOWN BOLTS, ETC. SHALL BE TIED IN PLACE PRIOR TO POURING CONCRETE.

REINFORCING STEEL

1. REINFORCING STEEL SHALL CONFORM TO ASTMA615 GRADE 40 FOR #4 BARS AND SMALLER. ALL REINFORCING STEEL SHALL CONFORM TO ASTMA615 GRADE 60 FOR #5 BARS AND LARGER. WELDED WIRE MESH TO BE ASTM A185, LAP 1-1/2 SPACES (9" MIN).
2. ALL BARS SHALL BE DEFORMED AS PER ASTM A305.
3. ALL BARS IN CONCRETE SHALL BE LAPPED A MINIMUM OF 40 BAR DIAMETERS (2'-0" MIN.) AT ALL SPLICES UNLESS NOTED OTHERWISE.
4. SPLICES OF HORIZONTAL REBAR IN WALLS AND FOOTINGS SHALL BE STAGGERED 4'-0" MINIMUM.
5. ALL BARS IN MASONRY SHALL BE LAPPED A MINIMUM OF 40 BAR DIAMETERS (2'-0" MIN.) AT ALL SPLICES UNLESS NOTED OTHERWISE.
6. ALL BENDING OF REINFORCING STEEL SHALL CONFORM TO THE LATEST EDITION OF THE CALIFORNIA BUILDING CODE.
7. ALL REINFORCING BARS SHALL BE ACCURATELY AND SECURELY PLACED PRIOR TO POURING CONCRETE OR GROUTING MASONRY.
8. CONCRETE PROTECTION FOR THE REINFORCEMENT SHALL BE AT LEAST EQUAL TO THE DIAMETER OF THE BARS. COVERAGE SHALL BE AS FOLLOWS:
   A. POURED AGAINST EARTH .....3"
   B. POURED AGAINST FORM BELOW GRADE .....2"
   C. FORMED SLABS .....1"
   D. SLABS ON GRADE (FROM TOP OF SLAB) .....1"
   E. COLUMNS AND BEAMS TO MAIN BARS .....2"
   F. WALLS EXPOSED TO WEATHER .....2"
   G. WALLS NOT EXPOSED TO WEATHER .....1"

FOUNDATION / SITEWORK

1. FOUNDATION DESIGN IS BASED ON THE CODE MINIMUM WITH NO SOIL REPORT PROVIDED.
2. THE ALLOWABLE SOIL BEARING VALUE IS 1000 PSF FOR CONTINUOUS FOOTINGS.
3. PROVIDE NON-EXPANSIVE SOIL FOR ALL FILL AS REQUIRED TO LEVEL PAD.
4. PROVIDE VAPOR BARRIER UNDER SLAB AS REQUIRED PER SOIL REPORT.
5. THERE SHALL BE NO UTILITY TRENCH NEAR THE BUILDING FOUNDATION WHICH EXTEND DEEPER THAN A 45 DEGREE LINE PROJECTED DOWN AND AWAY FROM THE BOTTOM OUTSIDE CORNER OF ANY FOOTING.
6. SURFACE WATER SHALL DRAIN AWAY FROM THE BUILDING PER ARCHITECTURAL PLANS.
7. PLACE 20'-0" REBAR IN FOUNDATION AT SERVICE LOCATIONS. STUB UP REBAR ABOVE THE FLOOR BY ELECTRIC SERVICE METERS.

MASONRY

1. ALL MASONRY WORK SHALL CONFORM TO THE LATEST EDITION OF THE CALIFORNIA BUILDING CODE.
2. CONCRETE MASONRY UNITS SHALL CONFORM TO ASTM C90-86, GRADE N. ALL CMU SHALL BE LIGHT-WEIGHT WITH MAXIMUM LINEAR SHRINKAGE OF 0.06%. f'm = 1500 PSI GROUTED REINFORCED CELLS.
3. ALL VERTICAL REINFORCING IN MASONRY WALLS NOT RETAINING EARTH SHALL BE LOCATED IN THE CENTER OF THE WALL UNLESS NOTED OTHERWISE.
4. ALL CELLS WITH STEEL ARE TO BE SOLID GROUTED. RETAINING WALLS ARE TO BE SOLID GROUTED.
5. MORTAR MIX SHALL BE COMPOSED OF ONE PART PORTLAND CEMENT AND THREE PARTS SAND AND NOT LESS THAN 1/4 PART NOR MORE THAN 1/2 PART LIME PUTTY FOR TYPE 'S' MORTAR. MINIMUM COMPRESSIVE STRENGTH TO BE f'c = 2000 PSI.
6. PROVIDE CLEANOUT OPENINGS AT BOTTOM OF ALL VERTICALLY GROUTED CELLS IF GROUT LIFT EXCEEDS 4'-0".
7. GROUT MIX SHALL BE COMPOSED OF ONE PART PORTLAND CEMENT TO 2.1 TO 3.0 MAX PARTS SAND AND NOT LESS THAN TWO PARTS PEA GRAVEL.
8. REINFORCING SHALL BE SECURELY HELD AND BRACED IN PLACE TO PREVENT MOVEMENT WHILE PLACING MASONRY UNITS AND GROUTING.
9. MASONRY TO HAVE SPECIAL INSPECTION WHEN SPECIFIED PER SECTION 1702 OF THE CALIFORNIA BUILDING CODE.

GLUELAMS / MANUFACTURED WOOD PRODUCTS

1. ALL FABRICATION AND WORKMANSHIP SHALL CONFORM TO THE CURRENT EDITION OF THE STANDARD SPECIFICATIONS FOR STRUCTURAL LAMINATED DOUGLAS FIR LUMBER BY THE WEST COAST LUMBERMAN'S ASSOCIATION AND THE CURRENT EDITION OF TIMBER CONSTRUCTION.
2. ALL GLUE LAMINATED MEMBERS SHALL BE DOUGLAS FIR, COMBINATION 24-F PER AITC.
3. IND. APP. GRADE: Fb = 2400 PSI; Fv = 165 PSI; E = 1.8x10^6 PSI
4. INDUSTRIAL APPEARANCE GRADE SHALL BE USED. MOISTURE CONTENT SHALL BE BETWEEN 7 - 14%
5. A CERTIFICATE OF INSPECTION FOR EACH GLUE LAMINATED MEMBER FROM AN APPROVED TESTING AGENCY SHALL BE SUBMITTED TO AND APPROVED BY THE LOCAL BUILDING DEPARTMENT AND BY THE ENGINEER PRIOR TO ERECTION. ALL GLUE LAMINATED MEMBERS SHALL BE PROPERLY IDENTIFIED TO THE SATISFACTION OF THE BUILDING DEPARTMENT.
6. ALL GLUE LAMINATED MEMBERS WILL HAVE A STANDARD CAMBER BASED ON A RADIUS = 1600' UNLESS NOTED OTHERWISE.
7. PARALLAM PSL 2.0E BY TRUSS JOIST MACMILLIAN PER NER 292 fb = 2900 PSI; fv = 290 PSI; E = 2.0
8. TRUSS JOIST MACMILIAN PRODUCTS PER NER 119, NER 126, NER 292, NER 481.
9. REFER TO MANUFACTURER'S REQUIREMENTS FOR ALLOWABLE DRILLING OF HOLES THROUGH TJI WEB.

FRAMING LEGEND:

A 6X6 @ 18"o.c.
B 2X6 @ 16"o.c.
C 2X8 @ 12"o.c.
D 2X8 @ 16"o.c.
(E) EXISTING MEMBER TO REMAIN
F 2X8 @ 24"o.c.
G 2X10 @ 12"o.c.
H 2X10 @ 16"o.c.
J 2X10 @ 24"o.c.
K (2)2X10 @ 16"o.c.
L 2X12 @ 12"o.c.
M 2X12 @ 16"o.c.
N 1.75X11.25 MICROLAM LVL @ 12"o.c.
P 1.75X11.25 MICROLAM LVL @ 16"o.c.
T TRUSS @ 24"o.c.

INDICATES SPAN AND DIRECTION OF ROOF RAFTERS
INDICATES SPAN AND DIRECTION OF ROOF TRUSSES
INDICATES SPAN AND DIRECTION OF FLOOR JOISTS
INDICATES SPAN AND DIRECTION OF DECK JOISTS
INDICATES SPAN AND DIRECTION OF CEILING JOISTS

MIL INDICATES (1) 1-3/4" X DEPTH OF FLOOR JOISTS MICROLLAM LVL 2.0E [PER ICC-ESR 1387 BY WEYERHAEUSER Fb=2600, Fv = 285, Fc = 750]
PSL INDICATES PARALLAM PSL 2.0E [PER ICC-ESR 1387 BY WEYERHAEUSER Fb=2900, Fv=290, Fc=750]
TSR INDICATES 1-1/4" X DEPTH OF JOISTS TIMBERSTRAND LSL RIM 1.9E [PER ICC-ESR 1387 BY WEYERHAEUSER Fb=3075, Fv=625, Fc=1090]
EN INDICATES EDGE NAILING @ 6"o.c. UNLESS NOTED OTHERWISE
CTM INDICATES CONNECTION BY TRUSS MANUFACTURER

# INDICATES HEADERS AND BEAMS AS REFERENCED TO STRUCTURAL CALCULATIONS
INDICATES REVISED WALL PER ARCHITECTURAL PLANS
INDICATES SHEAR WALL WITH SCHEDULE AND LENGTH SHOWN
SPN INDICATES SILL PLATE SPACING IN INCHES
(USE 0.131# X 3" GUN NAILS FOR SILL PLATE NAILING)
L= # '
# / INDICATES DETAIL # / CORRESPONDING PAGE

FRAMING NOTES LEGEND	FOUNDATION NOTES LEGEND
SPN16 : 0.131 x 3" SILL PLATE NAILING @ 16"o.c.	AB64 : 5/8" DIAMETER X 10" LONG ANCHOR BOLTS @ 64" O.C.
SPN12 : 0.131 x 3" SILL PLATE NAILING @ 12"o.c.	AB56 : 5/8" DIAMETER X 10" LONG ANCHOR BOLTS @ 56" O.C.
SPN10 : 0.131 x 3" SILL PLATE NAILING @ 10"o.c.	AB48 : 5/8" DIAMETER X 10" LONG ANCHOR BOLTS @ 48" O.C.
SPN8 : 0.131 x 3" SILL PLATE NAILING @ 8"o.c.	AB40 : 5/8" DIAMETER X 10" LONG ANCHOR BOLTS @ 40" O.C.
SPN6 : 0.131 x 3" SILL PLATE NAILING @ 6"o.c.	AB32 : 5/8" DIAMETER X 10" LONG ANCHOR BOLTS @ 32" O.C.
SPN4 : 0.131 x 3" SILL PLATE NAILING @ 4"o.c.	AB24 : 5/8" DIAMETER X 10" LONG ANCHOR BOLTS @ 24" O.C.
SPN3 : 0.131 x 3" SILL PLATE NAILING @ 3"o.c.	AB16 : 5/8" DIAMETER X 10" LONG ANCHOR BOLTS @ 16" O.C.
SPN2 : 0.131 x 3" SILL PLATE NAILING @ 2"o.c.	AB8 : 5/8" DIAMETER X 10" LONG ANCHOR BOLTS @ 8" O.C.
SCR3 : 1/4" x 4-1/2" SDS SCREWS IN PLATE @ 3"o.c.	XXAB : NUMBER OF 5/8" DIAMETER X 10" LONG ANCHOR BOLTS

NOTES:
A. WHERE DOUBLE SILO PLATES ARE USED PROVIDE PROGRESSIVE SILL PLATE NAILING AT SPACING INDICATED INTO EACH PLATE.
B. SILL PLATE NAILING IS BASED ON THE USE OF 3/4" THICK PLYWOOD FLOOR SHEATHING. THICKER SHEATHING REQUIRES THE USE OF LONGER NAILS WHICH ARE INCREASED IN LENGTH WITH THE INCREMENTAL INCREASE IN SHEATHING THICKNESS. NOTIFY ARMSTRONG ENGINEERING IF USE OF FLOOR SHEATHING IS DESIRED TO BE GREATER THAN 3/4" THICK.
C. 4X POSTS MINIMUM TO BE PROVIDED AT ALL HOLD DOWN POSTS UNLESS OTHERWISE NOTED ON PLANS.
D. 1-1/2" x DEPTH OF JOISTS RIM TO BE PROVIDED AT ALL EXTERIOR WALLS (TIMBERSTRAND RIM @ TJI FLOOR FRAMING AND FULL DEPTH 2X RIM @ CONVENTIONAL FLOOR FRAMING) UNLESS OTHERWISE NOTED.

LATERAL SHEAR NOTES:

VALUES BASED ON AWC SDPWS TABLE 4.3A (DOUGLAS FIR-LARCH MEMBERS SPACED @ 16"o.c.)
ALL WOOD STRUCTURAL PANELS TO BE PER DOC PS1 OR DOC PS2 OR ANSI/APA PRP210

VERTICAL SHEARWALL SCHEDULE:

10. 1/2 " STRUCTURAL I PANEL WITH 8d COMMON NAILS @ 6"o.c. AT EDGES AND 12" o.c. AT FIELD.....280 plf
11. 1/2 " STRUCTURAL I PANEL WITH 8d COMMON NAILS @ 4"o.c. AT EDGES AND 12" o.c. AT FIELD.....430 plf
12. 1/2 " STRUCTURAL I PANEL WITH 8d COMMON NAILS @ 3"o.c. AT EDGES AND 12" o.c. AT FIELD.....550 plf
13. 1/2 " STRUCTURAL I PANEL WITH 8d COMMON NAILS @ 2"o.c. AT EDGES AND 12" o.c. AT FIELD.....730 plf
14. 15/32" or 19/32" STRUCTURAL I PANEL WITH 10d COMMON NAILS @ 2"o.c. AT EDGES AND 12" o.c. AT FIELD.....870 plf
(E) EXISTING SHEAR WALL OR BRACE WALL TO REMAIN

NOTES:
A. 8d COMMON NAILS TO BE 2-1/2" x 0.131" DIA. @ SHEAR WALL TYPES 10-13.
   10d COMMON NAILS TO BE 2-1/2" x 0.148" DIA. @ SHEAR WALL TYPE 14.
   NAILS SHALL BE LOCATED AT LEAST 3/8" FROM THE PANEL EDGES.
B. WOOD STRUCTURAL PANEL INCLUDING OSB SHALL BE MATERIAL APPROVED BY APA, PFS/TECO OR PITTSBURGH TESTING LABORATORIES AND CONFORM TO THE REQUIREMENTS OF ITS TYPE IN DOC PS1 OR PS2. THESE VALUES ARE FOR DOUG-FIR LARCH OR SOUTHERN PINE. OTHER SPECIES MAY DIFFER IN SHEAR CAPACITIES.
C. ALL TOP PLATE NAILING SHALL BE INTO "UPPER" TOP PLATE ONLY. PROVIDE 2X BLOCKING AT HORIZONTAL WOOD STRUCTURAL PANEL JOINTS, 3X BLOCKING WHEN NAILING IS @ 3"o.c. OR LESS.
D. WHERE PANELS ARE APPLIED TO BOTH FACES OF WALL AND NAIL SPACING IS LESS THAN 6"o.c., PANEL JOINTS SHALL BE OFFSET TO FALL ON DIFFERENT FRAMING MEMBERS OR FRAMING SHALL BE 3X OR WIDER AND NAILS STAGGERED ON EACH SIDE. PROVIDE 3X FOUNDATION SILL AT ALL DOUBLE SIDED SHEAR WALLS.
E. WHERE NAILS ARE SPACED @ 2"o.c. OR LESS, THEY SHALL BE STAGGERED AND 3X OR WIDER FRAMING MEMBERS SHALL BE USED AT ADJOINING PANEL EDGES INCLUDING HORIZONTAL BLOCKS.
F. PROVIDE 3"x3"x0.229" THICK STEEL PLATE WASHER ON EACH ANCHOR BOLT.
G. SILL PLATE NAILING(SPN) ON PLANS TO BE 3" x 0.131" DIAMETER. SPN SHALL BE INSTALLED INTO CENTER OF RIM, BEAM, OR BLOCKING BELOW SHEAR WALL.
H. USE 3X MUDSILL PLATE ON SHEAR WALLS 12, 13, & 14 WHERE THEY ARE RESTING ON CONCRETE FOUNDATION. DO NOT USE 3X BOTTOM PLATE WHERE BOTTOM PLATE IS ON PLYWOOD SUBFLOOR UNLESS SPECIFICALLY DETAILED ON PLANS.

HORIZONTAL ROOF AND FLOOR SCHEDULE:

ROOF:
JOIST SPACING EQUAL TO OR LESS THAN 24"o.c. : 15/32" WOOD STRUCTURAL PANEL PII 32/16, WITH 8d COMMON NAILS @ 6"o.c. (2-1/2" x 0.131" DIAMETER) AT EDGES AND BOUNDARIES, 12"o.c. AT FIELD.

FLOOR:
JOIST SPACING EQUAL TO OR LESS THAN 16"o.c. : 19/32" WOOD STRUCTURAL PANEL T&G SHEATHING PII 32/16, WITH 10d NAILS @ 6"o.c. (2-3/8" x 0.148" DIAMETER) AT EDGES AND BOUNDARIES, 12"o.c. AT FIELD.

JOIST SPACING EQUAL TO OR LESS THAN 20"o.c. : 19/32" WOOD STRUCTURAL PANEL T&G SHEATHING PII 40/20, WITH 10d NAILS @ 6"o.c. (2-3/8" x 0.148" DIAMETER) AT EDGES AND BOUNDARIES, 12"o.c. AT FIELD.

JOIST SPACING EQUAL TO OR LESS THAN 24"o.c. : 23/32" WOOD STRUCTURAL PANEL T&G SHEATHING PII 48/24, WITH 10d NAILS @ 6"o.c. (2-3/8" x 0.148" DIAMETER) AT EDGES AND BOUNDARIES, 12"o.c. AT FIELD.

NOTES:
A. ALL ROOF AND FLOOR SHEATHING TO BE EXPOSURE 1 OR EXTERIOR.
B. FOR FLOOR SHEATHING, WOOD STRUCTURAL PANEL SHALL BE UNDERLAYMENT GRADE. ALL FLOOR SHEATHING SHALL BE GLUED WITH SUBFLOOR ADHESIVE AND NAILED TO FRAMING.
C. IN LIEU OF 10d COMMON NAILS AT FLOOR SHEATHING #8 x 2-1/2" LONG SCREWS MAY BE USED.
D. FOR ALL FLOOR SHEATHING, PANEL EDGES SHALL HAVE APPROVED T&G JOINTS OR SHALL BE SUPPORTED WITH BLOCKING. NOT REQUIRED WHEN LIGHTWEIGHT CONCRETE IS PLACED OVER SUBFLOOR.

STRUCTURAL OBSERVATION

1. NOT REQUIRED FOR THIS PROJECT

SIMPSON HARDWARE TYPE	ICC-ESR REPORT NUMBER
A35 AND LTP4 CLIPS	ESR-3096
ST STRAPS	ESR-3096
LUS HANGERS	ESR-3096
LS STRAPS	ER-112
MST STRAPS	ESR-2105
ECCQ CAPS	ESR-2604
IUS HANGERS	ESR-2552

DESIGN LOADS:

ROOF LOAD:
LL = 20 psf DL = 21 psf
FLOOR LOAD:
LL = 40 psf DL = 15 psf
DECK LOAD:
LL = 60 psf DL = 15 psf
EXTERIOR WALL LOAD:
DL = 16 psf
INTERIOR WALL LOAD:
DL = 7 psf

ENGINEERING:

1. MAPPED SPECTRAL RESPONSE ACCELERATIONS
   Ss = 1.471
   S1 = 0.533
2. SPECTRAL RESPONSE COEFFICIENTS
   Sds = 1.176
   Sd1 = 0.632
3. SEISMIC IMPORTANCE FACTOR = 1 SEISMIC OCCUPANCY TYPE = R
4. SITE CLASS = D
5. SEISMIC DESIGN CATEGORY = D
6. BASIC SEISMIC-FORCE RESISTING SYSTEM = LIGHT FRAME WALLS
7. DESIGN BASE SHEAR = 0.1992 x W
8. R = 6.5
9. RISK CATEGORY = II
10. ANALYSIS METHOD = PER ASCE7-16 12.14
11. FLOOD LOADS DO NOT APPLY
12. WIND LOAD: Vult = 100mph EXPOSURE:C I = 1.0
13. INTERNAL PRESSURE COEFFICIENT(GCpi) = ±0.18
14. COMPONENTS AND CLADDING PRESSURE = +2.8psf -6.6psf
15. ASSUMED SOIL BEARING PRESSURE = 1000 PSF

SPECIAL INSPECTIONS:

*PERIODIC SPECIAL INSPECTION IS REQUIRED FOR EPOXY INSTALLATIONS REQUIRED FOR PROJECT PER ICC-ESR 2508.

*CONTINUOUS SPECIAL INSPECTION IS REQUIRED FOR ANY FIELD WELDING THAT IS NOT PERFORMED IN A CERTIFIED WELDING FACILITY.

THESE PLANS ARE NOT TO BE USED FOR CONSTRUCTION UNLESS THEY HAVE BEEN STAMPED AS APPROVED BY THE BUILDING DEPARTMENT AND THERE IS A WET SIGNATURE ACROSS ENGINEERS STAMP. THESE PLANS ARE NOT TO BE REPRODUCED WITHOUT PERMISSION BY ARMSTRONG ENGINEERING & DRAFTING INC.

no.	REVISION	DATE

ARMSTRONG ENGINEERING & DRAFTING, INC.
33504 Magnolia Street
Menifee, CA. 92584
(714)225-7056
Scott@ArmstrongEngineering.net

STRUCTURAL GENERAL NOTES

CIRKS RESIDENCE
3542 VENTURE DRIVE
HUNTINGTON BEACH, CA. 92649

REGISTERED PROFESSIONAL ENGINEER
SCOTT DANIEL ARMSTRONG
47192
Exp. 12/31/2025
CIVIL
STATE OF CALIFORNIA

PLOT/SIGN DATE: 03/11/2024
SCALE: N.T.S.
JOB #: 2024-002
REVISION: #
SHEET #: SGN

1. 4" THICK CONCRETE SLAB WITH #3 BARS AT 18" O.C. EACH WAY AT MID HEIGHT. INSTALL 2" OF SAND ABOVE A 15mil VISQUEEN VAPOR BARRIER OVER 2" OF SAND OVER 4" THICK BASE OF ¾" OR LARGER CLEAN AGGREGATE. BEND SLAB REINFORCEMENT BARS INTO FOOTING OR PROVIDE 28"X28" #3 DOWELS AT 12" O.C. BENT INTO FOOTING AT DUAL POUR.
2. INSTALL 12" WIDE X 24" DEEP CONCRETE FOOTING WITH (2)#5 BARS AT 3" FROM TOP AND BOTTOM.

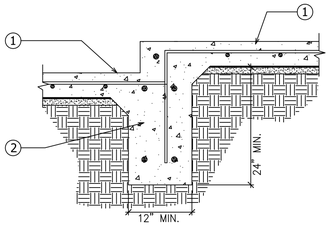

99 FOUNDATION CONNECTION DETAIL

1. EXISTING STUDS TO REMAIN.
2. EXISTING CONCRETE SLAB AND FOOTING TO REMAIN.
3. 5/8" DIAMETER ALL THREAD WITH 8" EMBEDMENT INTO EXISTING FOOTING WITH SIMPSON SET-XP EPOXY PER ESR-2508. SPACE ANCHORS AT 16" O.C. WITH 3" SQUARE X 0.229" THICK WASHER AT EACH ANCHOR.

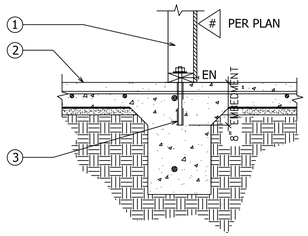

100 FOOTING DETAIL

1. PLYWOOD SHEAR PANEL PER PLAN OVER 2X STUDS @ 16" O.C.
2. PROVIDE 2X4 PRESSURE TREATED SILL WITH 5/8"ø X 10" LONG ANCHOR BOLTS SPACED PER PLAN WITH 3" SQUARE X 0.229" THICK BEARING PLATE WASHER AT EACH ANCHOR. INSTALL CUT WASHER ABOVE IF USING SLOTTED PLATE WASHERS.
3. 4" THICK CONCRETE SLAB WITH #3 BARS AT 18" O.C. EACH WAY AT MID HEIGHT. INSTALL 2" OF SAND ABOVE A 15mil VISQUEEN VAPOR BARRIER OVER 2" OF SAND OVER A 4" THICK BASE OF ¾" OR LARGER CLEAN AGGREGATE. BEND SLAB REINFORCEMENT BARS INTO FOOTING OR PROVIDE 28"X28" #4 DOWELS AT 12" O.C. BENT INTO FOOTING AT DUAL POUR.
4. INSTALL 12" WIDE X 24" DEEP CONCRETE FOOTING WITH (2)#5 BARS AT 3" FROM TOP AND BOTTOM.

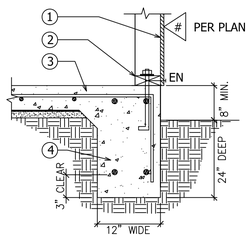

101 FOUNDATION CONNECTION

1. NEW 4" THICK CONCRETE SLAB WITH #3 BARS @ 18" O.C. EACH WAY AT MIDHEIGHT OVER 2" SAND BASE OVER 15mil. VISQUEEN MOISTURE BARRIER OVER 2" SAND OVER 4" THICK BASE OF ¾ OR LARGER CLEAN AGGREGATE. BEND SLAB REINFORCEMENT BARS INTO FOOTING OR PROVIDE 28"X28" #4 DOWELS AT 12" O.C. BENT INTO FOOTING AT DUAL POUR.
2. NEW 12" WIDE X 24" DEEP CONCRETE FOOTING WITH (2)#5 BARS AT 3" FROM TOP AND BOTTOM.

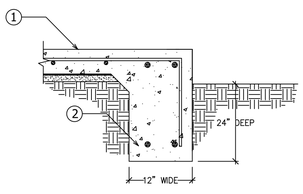

102 FOOTING DETAIL

NOTE:
- NAILS SHALL BE DRIVEN FLUSH TO SHEATHING AND NOT OVERDRIVEN. ALL DIAPHRAGM AND SHEAR WALL NAILING SHALL UTILIZE 'COMMON' NAILS WITH FULL HEADS UNLESS OTHERWISE APPROVED.
- FASTENERS FOR PRESERVATIVE-TREATED AND FIRE-RETARDENT-TREATED WOOD SHALL BE OF HOT DIPPED ZINC COATED GALVANIZED STEEL, STAINLESS STEEL, SILICONE BRONZE, OR COPPER. THE COATING WEIGHTS FOR ZINC-COATED FASTENERS SHALL BE IN ACCORDANCE WITH ASTM A 153. FASTENINGS FOR WOOD FOUNDATIONS SHALL BE AS REQUIRED IN AF&PA TECHNICAL REPORT #7.
- THE HOLE IN THE PLATE WASHER IS PERMITTED TO BE DIAGONALLY SLOTTED WITH A WIDTH OF UP TO 3/16" LARGER THAN THE BOLT DIAMETER AND A SLOT LENGTH NOT TO EXCEED 1.75", PROVIDED A STANDARD CUT WASHER IS PLACED BETWEEN THE PLATE WASHER AND THE NUT.
- HOLDOWN CONNECTOR BOLTS INTO WOOD FRAMING REQUIRE APPROVED PLATE WASHERS: AND HOLDOWNS SHALL BE FINGER TIGHT AND 1/2 WRENCH TURN JUST PRIOR TO COVERING THE WALL FRAMING. CONNECTOR BOLTS INTO WOOD FRAMING REQUIRE STEEL PLATE WASHERS ON THE POST ON THE OPPOSITE SIDE OF THE ANCHORAGE DEVICE. PLATE SIZE SHALL BE A MINIMUM OF 0.229" X 3" X 3".
- ROOF DIAPHRAGM NAILING SHALL BE INSPECTED BEFORE COVERING. FACE GRAIN OF PLYWOOD SHALL BE PERPENDICULAR TO SUPPORTS. FLOOR SHEATHING SHALL HAVE TONGUE AND GROOVE OR BLOCKED PANEL EDGES. PLYWOOD SPANS SHALL CONFORM WITH TABLE 2304.7.
- ALL BOLT HOLES SHALL BE DRILLED 1/32" TO 1/16" OVERSIZED MAXIMUM.
- SHEAR WALL ANCHOR BOLTS AND HOLD-DOWN HARDWARE MUST BE SECURED IN PLACE PRIOR TO FOUNDATION INSPECTION.

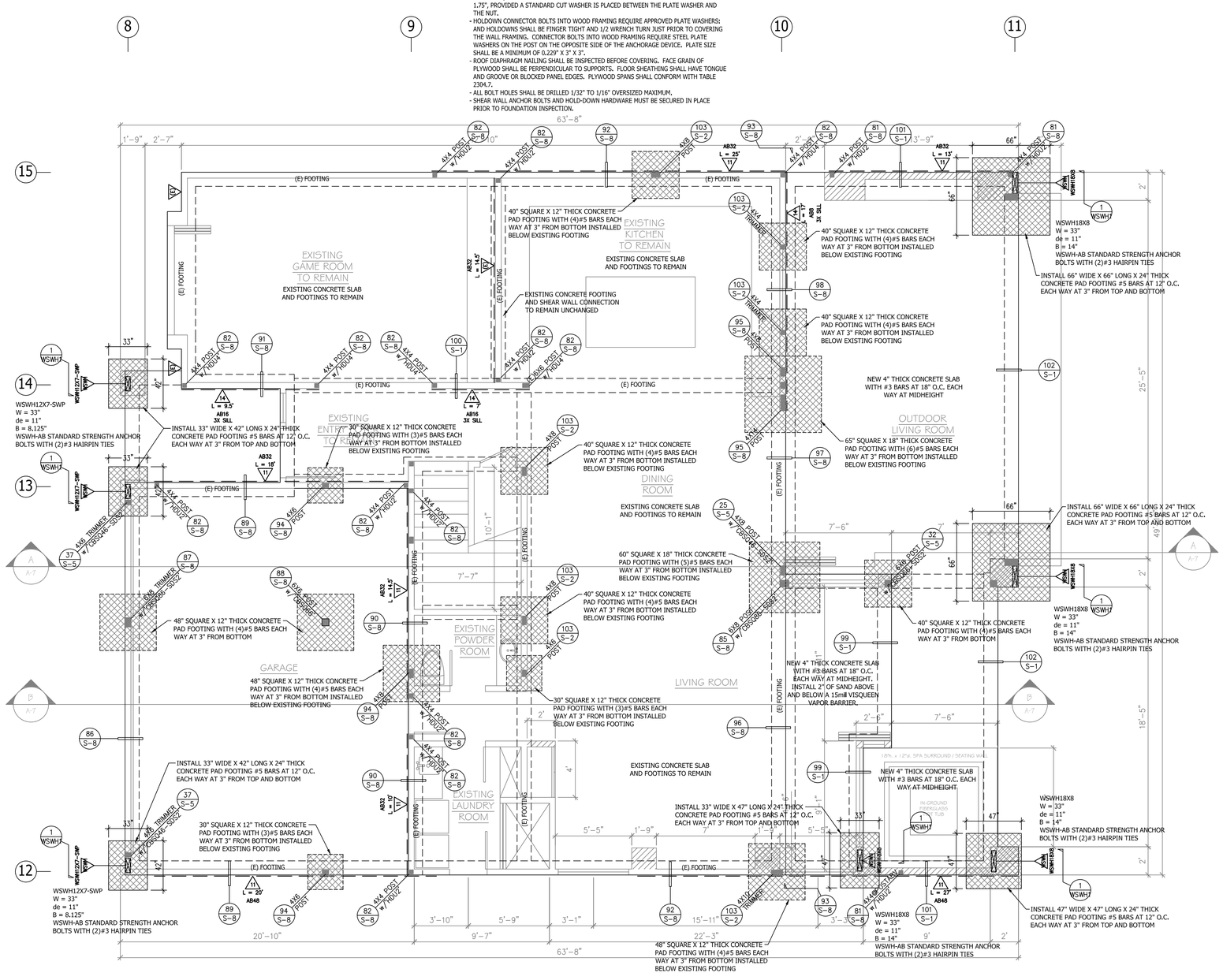

SEE SHEET SGN FOR STRUCTURAL NOTES AND LEGENDS NOT SHOWN HERE

FOUNDATION PLAN

THESE PLANS ARE NOT TO BE USED FOR CONSTRUCTION UNLESS THEY HAVE BEEN STAMPED AS APPROVED BY THE BUILDING DEPARTMENT AND THERE IS A WET SIGNATURE ACROSS ENGINEERS STAMP. THESE PLANS ARE NOT TO BE REPRODUCED WITHOUT PERMISSION BY ARMSTRONG ENGINEERING & DRAFTING INC.

no.	REVISION	DATE

ARMSTRONG ENGINEERING & DRAFTING, INC.
33504 Magnolia Street
Menifee, CA. 92584
(714)225-7056
Scott@ArmstrongEngineering.net

FOUNDATION PLAN

CIRKS RESIDENCE
3542 VENTURE DRIVE
HUNTINGTON BEACH, CA. 92649

REGISTERED PROFESSIONAL ENGINEER SCOTT MICHAEL ARMSTRONG CIVIL STATE OF CALIFORNIA

PLOT/SIGN DATE: 03/11/2024
SCALE: 1/4" = 1'-0"
JOB #: 2024-002
REVISION: #
SHEET #: S-1

1. NEW POST PER PLAN WITH EDGE NAILING FROM SHEAR PANEL WHERE SHEAR PANEL OCCURS.
2. EXISTING PRESSURE TREATED SILL TO REMAIN.
3. EXISTING SLAB AND FOOTING TO REMAIN.
4. NEW SQUARE PAD FOOTING PER PLAN BELOW EXISTING FOOTING.

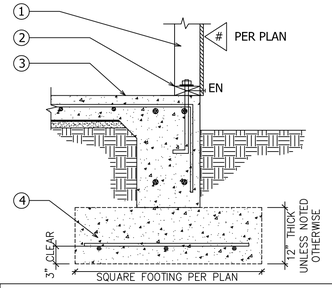

103 FOUNDATION CONNECTION

1. CONTINUOUS RIDGE BEAM PER PLAN.
2. HIP BEAM PER PLAN.
3. INSTALL SIMPSON 'HHRC44' HANGER AT 4X HIPS.

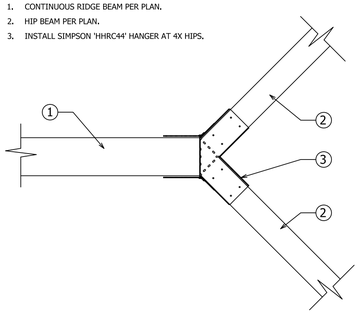

104 ROOF CONNECTION DETAIL

1. EXISTING FLOOR SHEATHING AND CANTILEVERED FLOOR JOISTS TO REMAIN.
2. FULL DEPTH BLOCKING BETWEEN JOIST OVER WALL WITH EDGE NAILING FROM FLOOR SHEATHING.
3. PROVIDE 'A35' CLIPS OR 'LTP4' CLIPS FROM BLOCKING TO TOP PLATE SPACED AT 8" O.C.
4. SHEAR PANEL PER PLAN WHERE OCCURS.
5. BEAM PER PLAN WITH 'HTS30' EACH SIDE TO CRIPPLE BELOW.

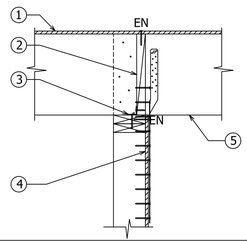

105 BEAM CONNECTION

1. BEAM PER PLAN. RIP TOP OF JOISTS AND BEAM $\frac{1}{8}$" PER 12" FOR DRAINAGE.
2. INSTALL 'HTS16' EACH SIDE OF BEAM TO NAILER BELOW. ATTACH NAILER TO WEB OF BEAM WITH (2)$\frac{3}{8}$"ϕ NELSON STUDS WELDED TO WEB OF BEAM.
3. INSTALL 2X12 NAILER ON TOP OF STEEL BEAM ATTACHED WITH $\frac{3}{8}$"ϕ NELSON STUDS WELDED AT 24" O.C.
4. CONTINUOUS STEEL DROP BEAM PER PLAN.
5. INSTALL $\frac{3}{8}$" WEB STIFFENERS EACH SIDE OF WEB AT 48" O.C. WELDED TO FLANGE AND WEB WITH $\frac{1}{4}$" FILLET ALL AROUND.
6. FULL DEPTH BLOCKING BETWEEN JOIST OVER NAILER WITH EDGE NAILING FROM DECK SHEATHING. PROVIDE 'A35' CLIPS OR 'LTP4' CLIPS FROM BLOCKING TO NAILER AT 24" O.C.

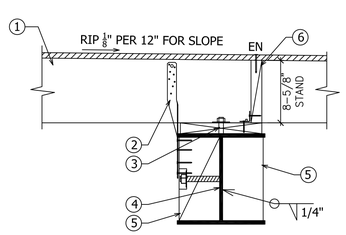

106 BEAM CONNECTION DETAIL

NOTE:
- NAILS SHALL BE DRIVEN FLUSH TO SHEATHING AND NOT OVERDRIVEN. ALL DIAPHRAGM AND SHEAR WALL NAILING SHALL UTILIZE 'COMMON' NAILS WITH FULL HEADS UNLESS OTHERWISE APPROVED.
- FASTENERS FOR PRESERVATIVE-TREATED AND FIRE-RETARDENT-TREATED WOOD SHALL BE OF HOT DIPPED ZINC COATED GALVANIZED STEEL, STAINLESS STEEL, SILICONE BRONZE, OR COPPER. THE COATING WEIGHTS FOR ZINC-COATED FASTENERS SHALL BE IN ACCORDANCE WITH ASTM A 153. FASTENINGS FOR WOOD FOUNDATIONS SHALL BE AS REQUIRED IN AF&PA TECHNICAL REPORT #7.
- THE HOLE IN THE PLATE WASHER IS PERMITTED TO BE DIAGONALLY SLOTTED WITH A WIDTH OF UP TO 3/16" LARGER THAN THE BOLT DIAMETER AND A SLOT LENGTH NOT TO EXCEED 1.75", PROVIDED A STANDARD CUT WASHER IS PLACED BETWEEN THE PLATE WASHER AND THE NUT.
- HOLDOWN CONNECTOR BOLTS INTO WOOD FRAMING REQUIRE APPROVED PLATE WASHERS: AND HOLDOWNS SHALL BE FINGER TIGHT AND 1/2 WRENCH TURN JUST PRIOR TO COVERING THE WALL FRAMING. CONNECTOR BOLTS INTO WOOD FRAMING REQUIRE STEEL PLATE WASHERS ON THE POST ON THE OPPOSITE SIDE OF THE ANCHORAGE DEVICE. PLATE SIZE SHALL BE A MINIMUM OF 0.229" X 3" X 3".
- ROOF DIAPHRAGM NAILING SHALL BE INSPECTED BEFORE COVERING. FACE GRAIN OF PLYWOOD SHALL BE PERPENDICULAR TO SUPPORTS. FLOOR SHEATHING SHALL HAVE TONGUE AND GROOVE OR BLOCKED PANEL EDGES. PLYWOOD SPANS SHALL CONFORM WITH TABLE 2304.7.
- ALL BOLT HOLES SHALL BE DRILLED 1/32" TO 1/16" OVERSIZED MAXIMUM.
- SHEAR WALL ANCHOR BOLTS AND HOLD-DOWN HARDWARE MUST BE SECURED IN PLACE PRIOR TO FOUNDATION INSPECTION.

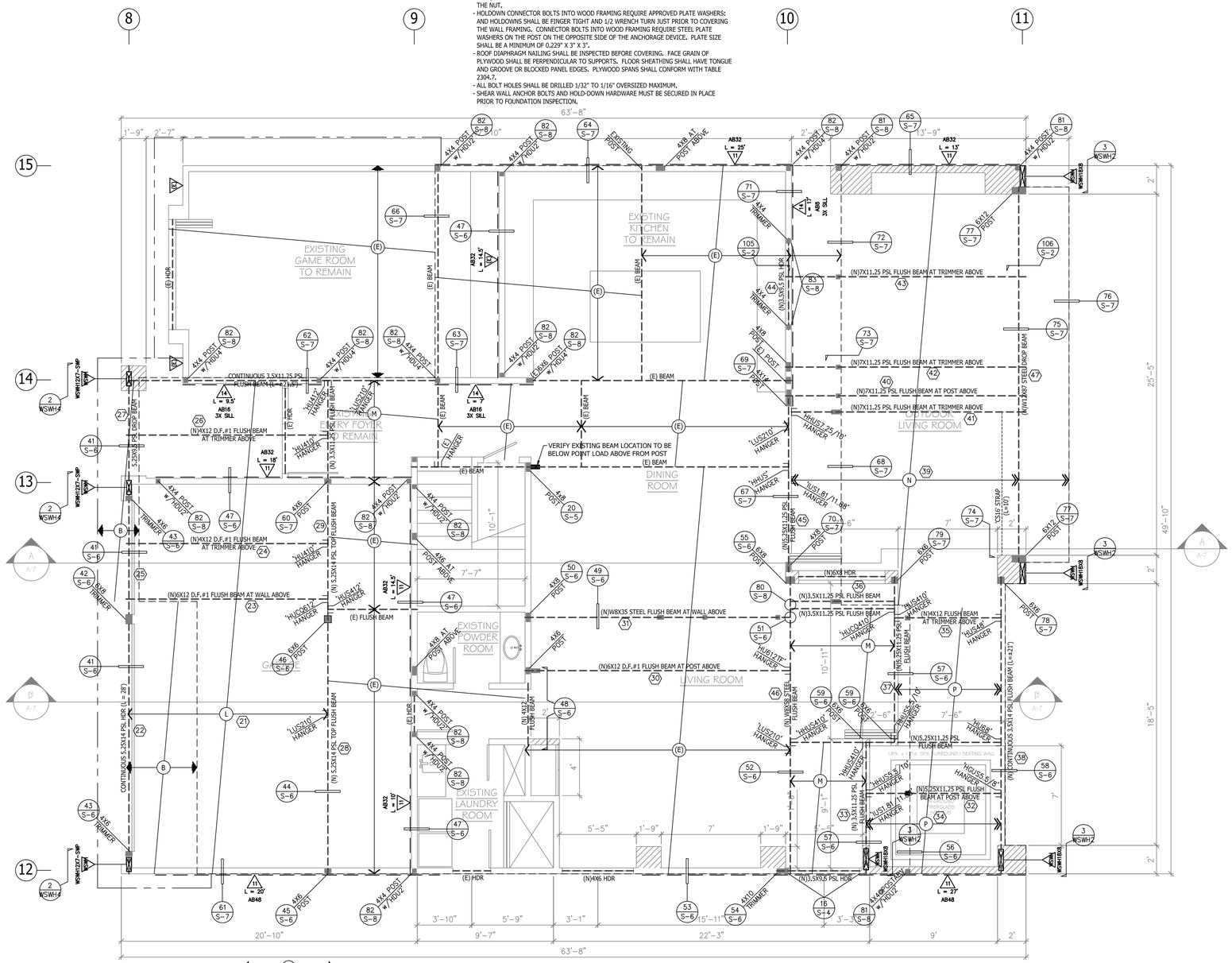

(IE)	INDICATES SPAN AND DIRECTION OF EXISTING ROOF RAFTERS TO REMAIN
(B)	INDICATES SPAN AND DIRECTION OF 2X6 ROOF RAFTERS AT 16" O.C.
(IE)	INDICATES SPAN AND DIRECTION OF EXISTING FLOOR JOISTS TO REMAIN
(L)	INDICATES SPAN AND DIRECTION OF 2X12 FLOOR JOISTS AT 12" O.C.
(M)	INDICATES SPAN AND DIRECTION OF 2X12 FLOOR JOISTS AT 16" O.C.
(N)	INDICATES SPAN AND DIRECTION OF 1.75X11.25 LVL DECK JOISTS AT 12" O.C.
(P)	INDICATES SPAN AND DIRECTION OF 1.75X11.25 LVL DECK JOISTS AT 16" O.C.

(#) REFER TO STRUCTURAL CALCULATIONS FOR BEAM/HEADER DESIGN

ROOF SHEATHING = 1/2" CDX or OSB (UNBLOCKED) WITH 8d NAILS @ 6/12

FLOOR AND DECK SHEATHING = 3/4" T&G CDX or OSB (UNBLOCKED AND GLUED TO JOISTS) WITH 10d NAILS @ 6/10

SEE SHEET SGN FOR STRUCTURAL NOTES AND LEGENDS NOT SHOWN HERE

FIRST FLOOR FRAMING PLAN

THESE PLANS ARE NOT TO BE USED FOR CONSTRUCTION UNLESS THEY HAVE BEEN STAMPED AS APPROVED BY THE BUILDING DEPARTMENT AND THERE IS A WET SIGNATURE ACROSS ENGINEERS STAMP. THESE PLANS ARE NOT TO BE REPRODUCED WITHOUT PERMISSION BY ARMSTRONG ENGINEERING & DRAFTING INC.

no.	REVISION	DATE

ARMSTRONG ENGINEERING & DRAFTING, INC.
33504 Magnolia Street
Menifee, CA. 92584
(714)225-7056
Scott@ArmstrongEngineering.net

FIRST FLOOR FRAMING PLAN

CIRKS RESIDENCE
3542 VENTURE DRIVE
HUNTINGTON BEACH, CA. 92649

REGISTERED PROFESSIONAL ENGINEER SCOTT DANIEL ARMSTRONG # 47151 Exp. 12/31/2025 CIVIL STATE OF CALIFORNIA

PLOT/SIGN DATE:	03/11/2024
SCALE:	1/4" = 1'-0"
JOB #:	2024-002
REVISION:	#
SHEET #:	S-2

NOTE:
- NAILS SHALL BE DRIVEN FLUSH TO SHEATHING AND NOT OVERDRIVEN. ALL DIAPHRAGM AND SHEAR WALL NAILING SHALL UTILIZE 'COMMON' NAILS WITH FULL HEADS UNLESS OTHERWISE APPROVED.
- FASTENERS FOR PRESERVATIVE-TREATED AND FIRE-RETARDENT-TREATED WOOD SHALL BE OF HOT DIPPED ZINC COATED GALVANIZED STEEL, STAINLESS STEEL, SILICONE BRONZE, OR COPPER. THE COATING WEIGHTS FOR ZINC-COATED FASTENERS SHALL BE IN ACCORDANCE WITH ASTM A 153. FASTENINGS FOR WOOD FOUNDATIONS SHALL BE AS REQUIRED IN AF&PA TECHNICAL REPORT #7.
- THE HOLE IN THE PLATE WASHER IS PERMITTED TO BE DIAGONALLY SLOTTED WITH A WIDTH OF UP TO 3/16" LARGER THAN THE BOLT DIAMETER AND A SLOT LENGTH NOT TO EXCEED 1.75", PROVIDED A STANDARD CUT WASHER IS PLACED BETWEEN THE PLATE WASHER AND THE NUT.
- HOLDOWN CONNECTOR BOLTS INTO WOOD FRAMING REQUIRE APPROVED PLATE WASHERS: AND HOLDOWNS SHALL BE FINGER TIGHT AND 1/2 WRENCH TURN JUST PRIOR TO COVERING THE WALL FRAMING. CONNECTOR BOLTS INTO WOOD FRAMING REQUIRE STEEL PLATE WASHERS ON THE POST ON THE OPPOSITE SIDE OF THE ANCHORAGE DEVICE. PLATE SIZE SHALL BE A MINIMUM OF 0.229" X 3" X 3".
- ROOF DIAPHRAGM NAILING SHALL BE INSPECTED BEFORE COVERING. FACE GRAIN OF PLYWOOD SHALL BE PERPENDICULAR TO SUPPORTS. FLOOR SHEATHING SHALL HAVE TONGUE AND GROOVE OR BLOCKED PANEL EDGES. PLYWOOD SPANS SHALL CONFORM WITH TABLE 2304.7.
- ALL BOLT HOLES SHALL BE DRILLED 1/32" TO 1/16" OVERSIZED MAXIMUM.
- SHEAR WALL ANCHOR BOLTS AND HOLD-DOWN HARDWARE MUST BE SECURED IN PLACE PRIOR TO FOUNDATION INSPECTION.

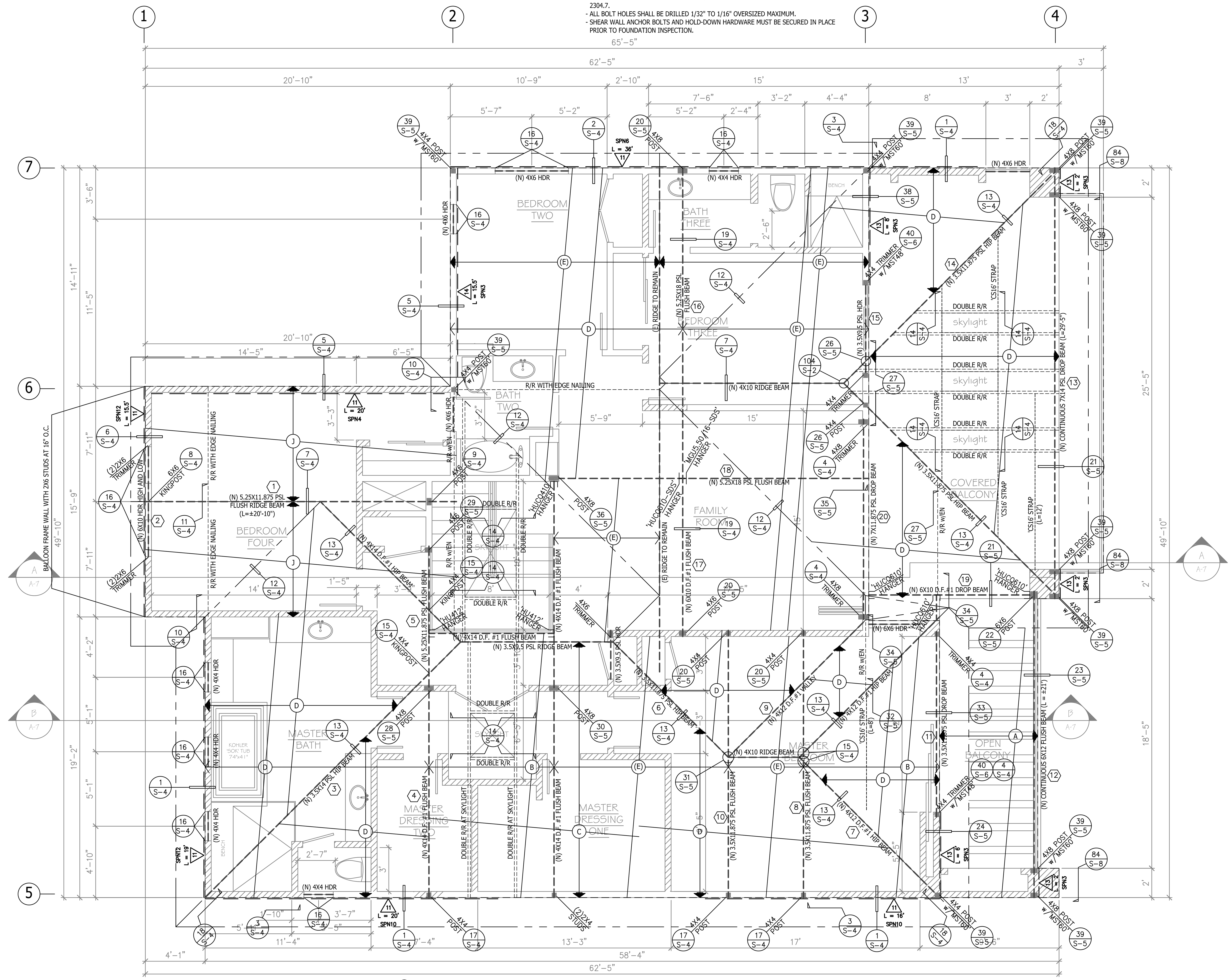

Symbol	Description
(E)	INDICATES SPAN AND DIRECTION OF EXISTING ROOF RAFTERS TO REMAIN
A	INDICATES SPAN AND DIRECTION OF 6X6 TRELLIS MEMBERS AT 18" O.C.
C	INDICATES SPAN AND DIRECTION OF 2X8 ROOF RAFTERS AT 12" O.C.
D	INDICATES SPAN AND DIRECTION OF 2X8 ROOF RAFTERS AT 16" O.C.
J	INDICATES SPAN AND DIRECTION OF 2X10 ROOF RAFTERS AT 24" O.C.
(E)	INDICATES SPAN AND DIRECTION OF EXISTING CEILING JOISTS TO REMAIN
B	INDICATES SPAN AND DIRECTION OF 2X6 CEILING JOISTS AT 16" O.C.
D	INDICATES SPAN AND DIRECTION OF 2X8 CEILING JOISTS AT 16" O.C.

REFER TO STRUCTURAL CALCULATIONS FOR BEAM/HEADER DESIGN

ROOF SHEATHING = 1/2" CDX or OSB (UNBLOCKED) WITH 8d NAILS @ 6/12

SEE SHEET SGN FOR STRUCTURAL NOTES AND LEGENDS NOT SHOWN HERE

ROOF FRAMING PLAN

THESE PLANS ARE NOT TO BE USED FOR CONSTRUCTION UNLESS THEY HAVE BEEN STAMPED AS APPROVED BY THE BUILDING DEPARTMENT AND THERE IS A WET SIGNATURE ACROSS ENGINEERS STAMP. THESE PLANS ARE NOT TO BE REPRODUCED WITHOUT PERMISSION BY ARMSTRONG ENGINEERING & DRAFTING INC.

no.	REVISION	DATE

ARMSTRONG ENGINEERING & DRAFTING, INC.
33504 Magnetite Street
Menifee, CA. 92584
(714)225-7056
Scott@ArmstrongEngineering.net

ROOF FRAMING PLAN

CIRKS RESIDENCE
3542 VENTURE DRIVE
HUNTINGTON BEACH, CA. 92649

PLOT/SIGN DATE: 03/11/2024
SCALE: 1/4" = 1'-0"
JOB #: 2024-002
REVISION: #
SHEET #: S-3

1. FLUSH BEAM PER PLAN. OK TO BACK-CUT TOP TO MATCH SLOPE OF ROOF.
2. PROVIDE 'A35' CLIP EACH SIDE FROM FLUSH BEAM TO TOP PLATE.
3. DOUBLE TOP PLATES WITH MINIMUM 4' LAP WITH (10)16d NAILS PER SPLICE.
4. POST PER PLAN CENTER UNDER FLUSH BEAM.

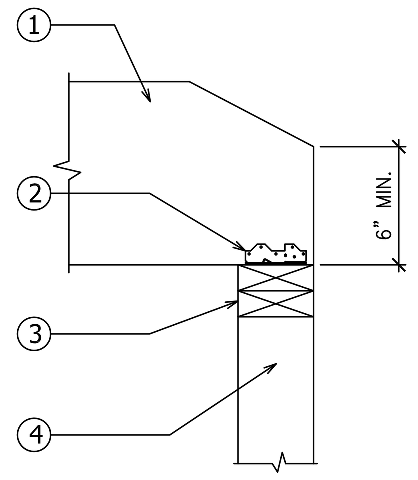

17 BEAM CONNECTION DETAIL

1. ROOF RAFTERS PER PLAN.
2. INSTALL (4)10d FACE NAILS PER RAFTER INTO HIP/VALLEY.
3. HIP/VALLEY BEAM PER PLAN.

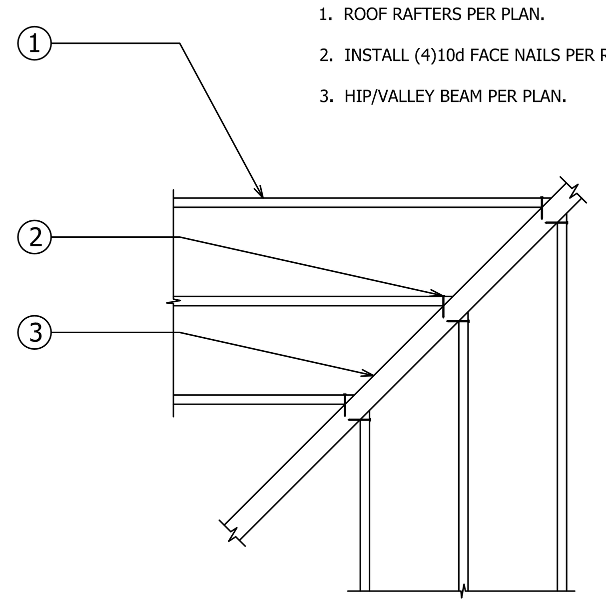

13 ROOF CONNECTION DETAIL

1. PROVIDE 'LSTA36' STRAP OVER SHEATHING FROM END ROOF RAFTER TO END ROOF RAFTER.
2. ROOF SHEATHING PER PLAN.
3. ROOF RAFTER PER PLAN OVER WALL WITH EDGE NAILING FROM ROOF SHEATHING.
4. FLUSH RIDGE BEAM PER PLAN.
5. FULL HEIGHT KINGPOST PER PLAN CENTER UNDER FLUSH RIDGE BEAM.
6. 2X4 STUDS @ 16" O.C.

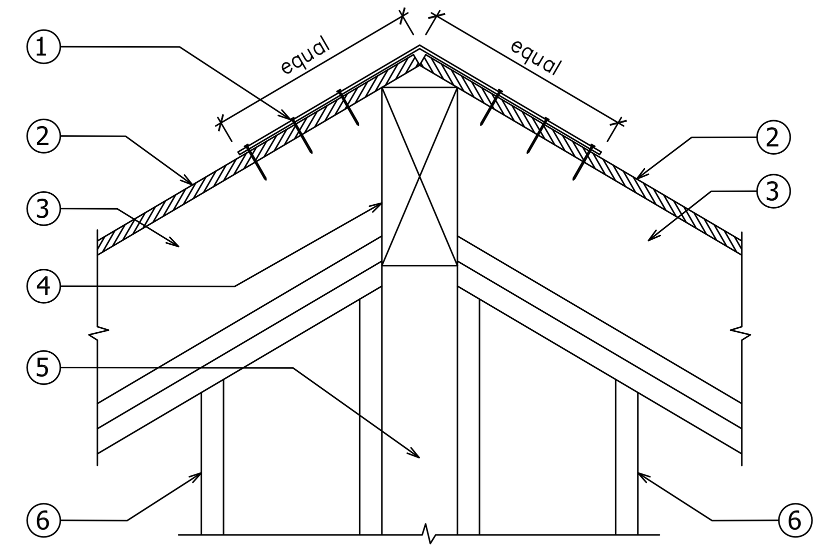

9 KINGPOST CONNECTION

1. ROOF SHEATHING OVER RAFTERS PER PLAN.
2. 8d NAILS @ 6" O.C. INTO FULL DEPTH BLOCKING.
3. OVERHANG AND FASCIA TO MATCH EXISTING.
4. PLYWOOD EDGE NAILING PER PLAN WHERE OCCURS.
5. PLYWOOD PER PLAN WHERE OCCURS OVER 2X4 STUDS SPACED AT 16" o.c. MAX.
6. PROVIDE 'A35' CLIPS SPACED AT 16" O.C.
7. CEILING JOIST PER PLAN WITH (5)16d NAILS INTO EACH RAFTER.
8. 2x4 TOP PLATES WITH MINIMUM 4' LAP WITH (10)16d NAILS PER SPLICE.

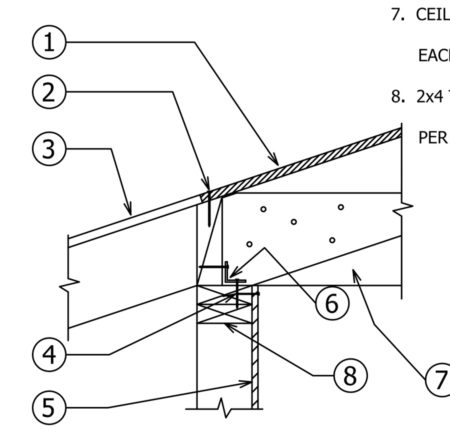

5 SHEAR TRANSFER DETAIL

1. ROOF SHEATHING OVER RAFTERS PER PLAN.
2. 8d NAILS @ 6" O.C. INTO FULL DEPTH BLOCKING.
3. OVERHANG AND FASCIA TO MATCH EXISTING.
4. PLYWOOD EDGE NAILING PER PLAN WHERE OCCURS.
5. PLYWOOD PER PLAN WHERE OCCURS OVER 2X4 STUDS SPACED AT 16" o.c. MAX.
6. PROVIDE 'A35' CLIPS SPACED AT 16" O.C.
7. CEILING JOIST PER PLAN WITH (5)16d NAILS INTO EACH RAFTER.
8. 2x4 TOP PLATES WITH MINIMUM 4' LAP WITH (10)16d NAILS PER SPLICE.

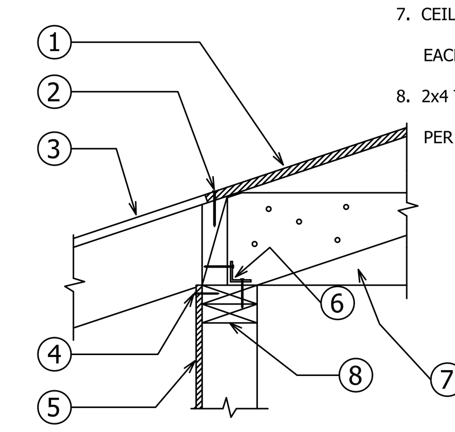

1 SHEAR TRANSFER AT EAVE

1. HIP BEAM PER PLAN WITH 'A35' CLIP EACH SIDE TO PLATE BELOW. OK TO BACK-CUT BOTTOM OF HIP BEAM TO MATCH STAND OF RAFTERS.
2. DOUBLE TOP PLATES WITH 4' MINIMUM SPLICE WITH (10)16d NAILS PER SPLICE.
3. POST PER PLAN AT CORNER OR (3)STUDS IF NO POST CALLED OUT ON PLANS.
4. 2X4 STUDS @ 16" O.C. UNLESS NOTED OTHERWISE

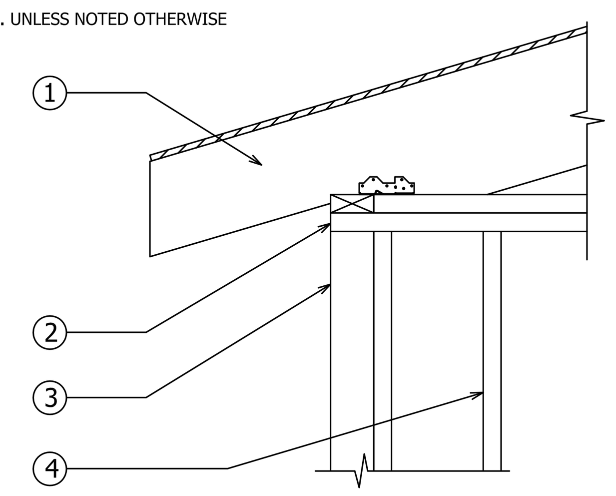

18 HIP BEAM CONNECTION

1. PROVIDE 'CS16' COIL STRAP WITH 10d NAILS INTO FULL DEPTH BLOCKING OVER ROOF SHEATHING.
2. FULL DEPTH BLOCKING FOR LENGTH OF STRAP.
3. ROOF RAFTERS PER PLAN.
4. INSTALL DOUBLE RAFTERS FOR HEADOUT AT SKYLIGHT.
5. DOUBLE RAFTERS AT SKYLIGHT HEADOUT WITH 'HUA28-2' HANGER TO HEADOUT BEAM.

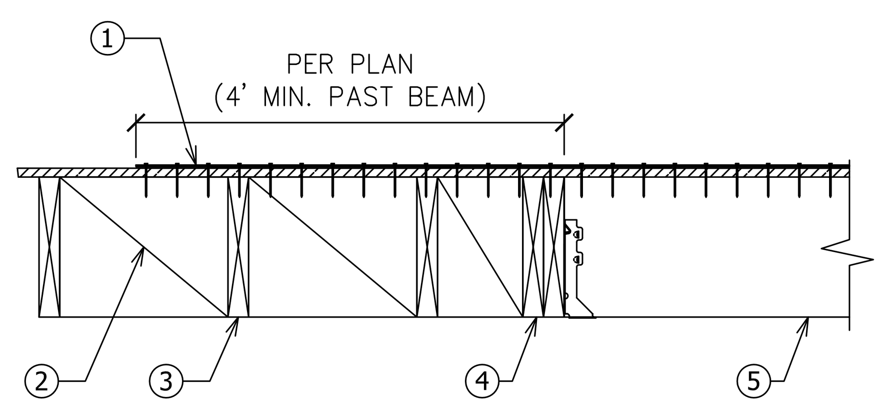

14 STRAP AT SKYLIGHT

1. ROOF RAFTER PER PLAN WITH EDGE NAILING FROM ROOF SHEATHING.
2. PROVIDE 'LSTA36' STRAP WITH EQUAL NUMBER OF 10d NAILS INTO RAFTER AND PLATE.
3. ROOF RAFTERS PER PLAN WITH FULL DEPTH BLOCKING BETWEEN.

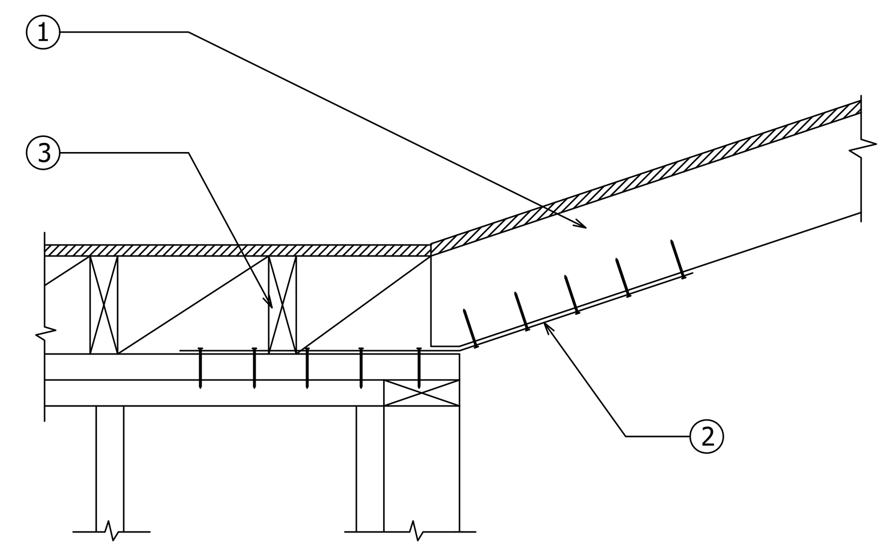

10 DRAG TIE CONNECTION

1. ROOF SHEATHING AND RAFTERS PER PLAN.
2. 8d COMMON NAILS @ 6" O.C. INTO END RAFTER.
3. 2X4 OUTLOOKERS AT 32" O.C. MAX FOR FASCIA.
4. PLYWOOD EDGE NAILING PER PLAN WHERE OCCURS.
5. PLYWOOD PER PLAN WHERE OCCURS.
6. DOUBLE TOP PLATE WITH 4' MINIMUM LAP. PROVIDE (10)16d NAILS PER SPLICE.
7. INSTALL 4X6 BLOCKING AT HORIZONTAL SPLICES IN SHEAR PANEL.
8. FULL HEIGHT 2X6 BALLOON FRAMED STUDS @ 16" O.C.

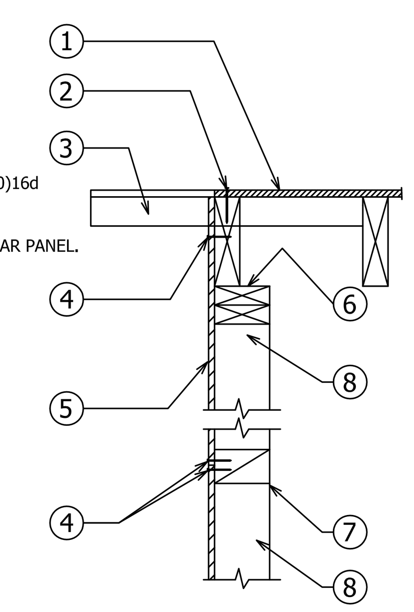

6 SHEAR TRANSFER AT ROOF

1. ROOF SHEATHING AND RAFTERS PER PLAN.
2. 8d COMMON NAILS @ 6" O.C. INTO END RAFTER.
3. 2X4 OUTLOOKERS AT 32" O.C. MAX FOR FASCIA.
4. PLYWOOD EDGE NAILING PER PLAN WHERE OCCURS.
5. PLYWOOD PER PLAN WHERE OCCURS.
6. SINGLE 2X4 TOP PLATE.
7. DOUBLE TOP PLATE WITH 4' MINIMUM LAP. PROVIDE (10)16d NAILS PER SPLICE.
8. 2X4 STUDS @ 16" O.C.

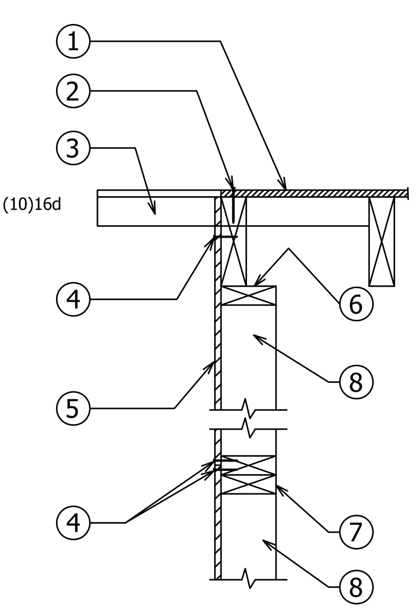

2 SHEAR TRANSFER AT GABLE END

1. EXISTING RAFTERS AND ROOF SHEATHING TO REMAIN.
2. PROVIDE 2X4 BRACING @ 48" O.C FOR 2X6 PURLIN.
3. NEW CEILING JOISTS PER PLAN WITH 'LUS26' HANGERS TO FLUSH BEAM.
4. NEW FLUSH BEAM PER PLAN.
5. ST22 @ 48" O.C. FROM RAFTER TO RAFTER.
6. EXISTING RIDGE BOARD TO REMAIN.
7. PROVIDE 2X4 KICKERS AT 48" O.C. FOR SUPPORT OF RIDGE BOARD.

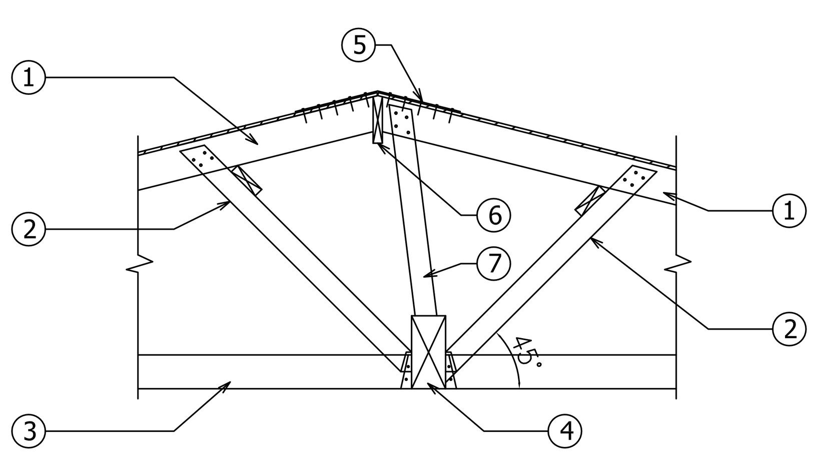

19 ROOF CONNECTION DETAIL

1. HIP OR VALLEY BEAM PER PLAN.
2. KINGPOST PER PLAN WITH 'LTP4' CLIP EACH SIDE TO HIP AND 'A35' EACH SIDE TO FLUSH BEAM BELOW.
3. FLUSH BEAM PER PLAN.

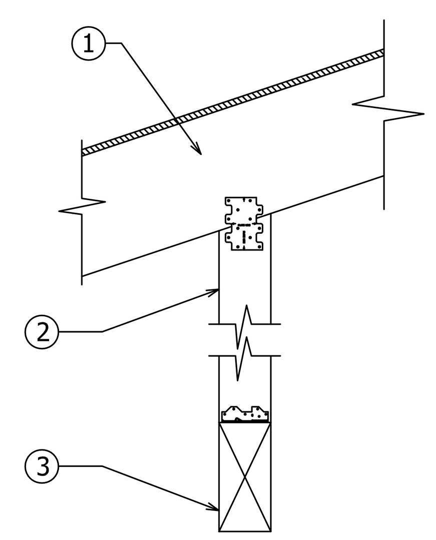

15 KINGPOST CONNECTION

1. FLUSH RIDGE BEAM PER PLAN.
2. PROVIDE 'LSTA36' STRAP FROM RAFTER TO RAFTER INLINE WITH EXTERIOR WALL INSTALLED OVER ROOF SHEATHING.
3. ROOF SHEATHING PER PLAN.
4. ROOF RAFTERS INLINE WITH WALL WITH EDGE NAILING FROM ROOF SHEATHING.

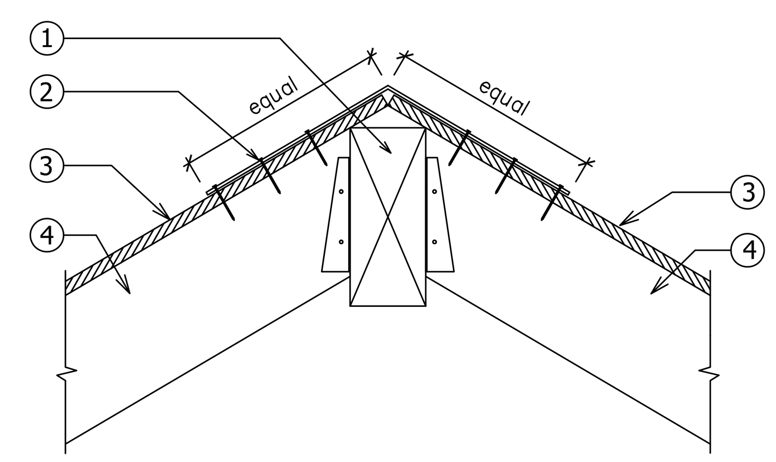

11 DRAG TIE CONNECTION

1. FLUSH RIDGE BEAM PER PLAN.
2. PROVIDE 'ST22' STRAPS @ 48" O.C. FROM RAFTER TO RAFTER INSTALLED OVER ROOF SHEATHING.
3. ROOF SHEATHING PER PLAN.
4. ROOF RAFTERS PER PLAN WITH 'LUS210' HANGERS TO FLUSH RIDGE BEAM.

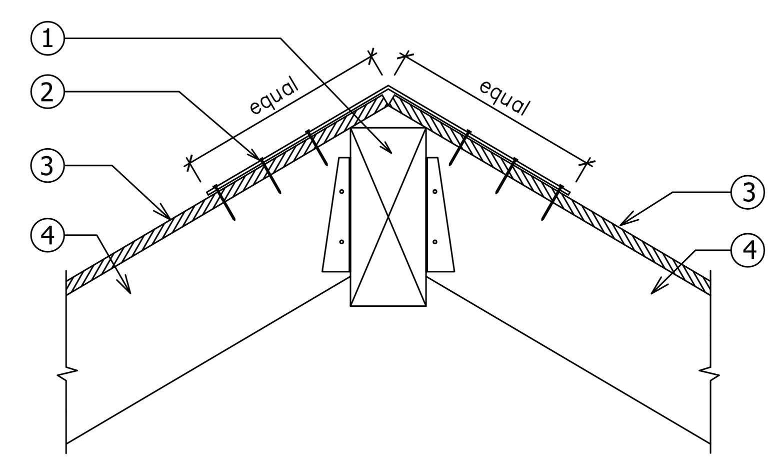

7 ROOF FRAMING CONNECTION

1. EXISTING DOUBLE TOP PLATES TO REMAIN.
2. PROVIDE 'ST6224' STRAP FROM PLATE TO PLATE IF SPLICED.
3. 2X4 STUDS @ 16" O.C.
4. NEW DOUBLE TOP PLATES.

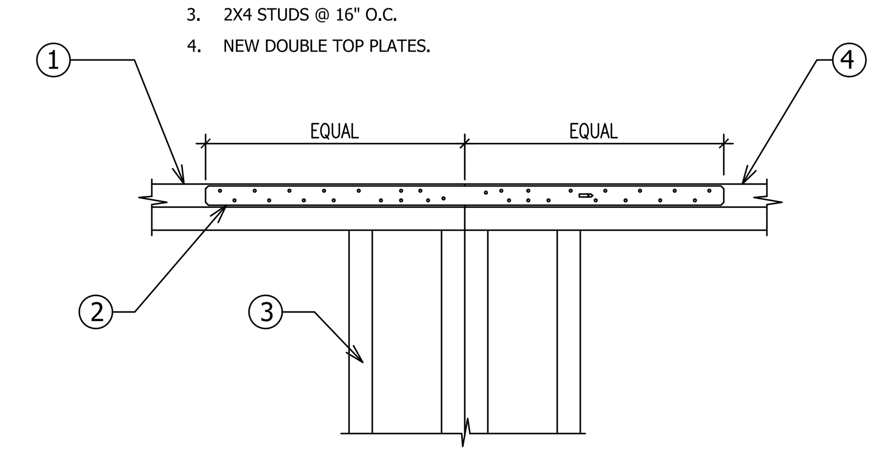

3 STRAP AT PLATES

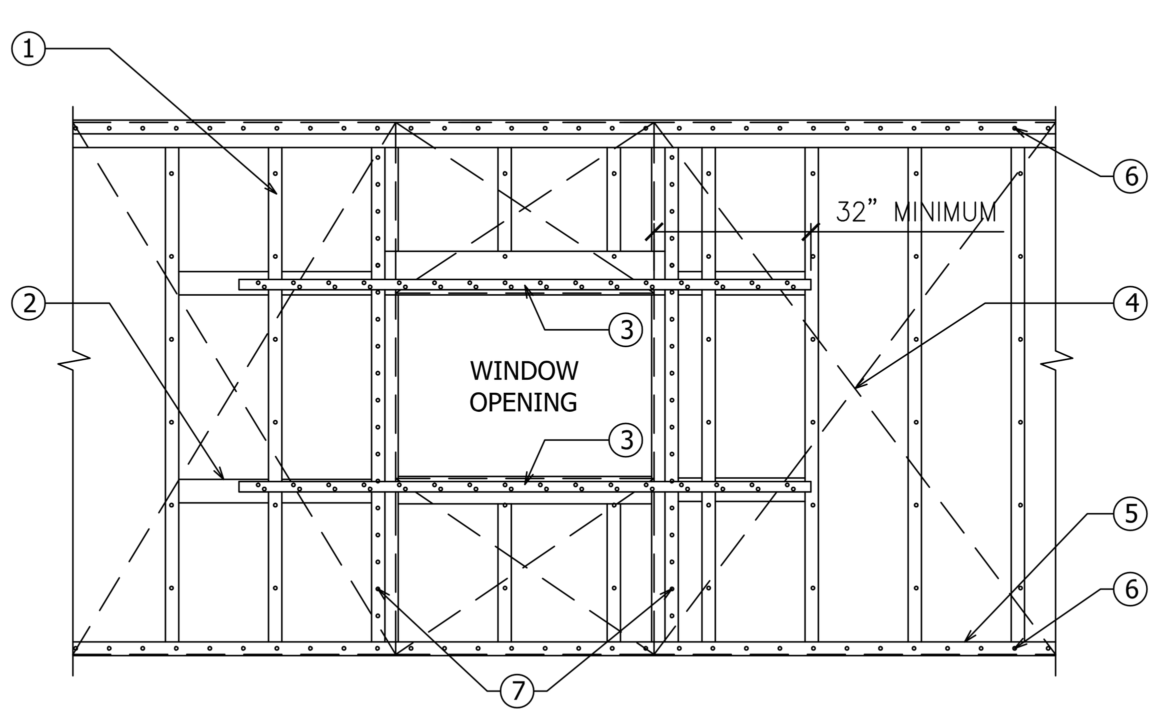

1. 2X STUDS @ 16" O.C. PROVIDE 3X STUDS AT PANEL EDGES WHERE REQUIRED PER PLAN(SHEAR WALL TYPES 12, 13, 14).
2. 4X4 BLOCKING FOR CS16 NAILING.
3. CONTINUOUS CS16 STRAP w/10d NAILS @ 4" O.C.
4. PLYWOOD SHEAR PER PLAN. APPLY EACH SIDE OF WINDOW AND ALSO ABOVE AND BELOW WINDOW OPENING.
5. SILL PLATE NAILING OR BOLTING PER PLAN.
6. PROVIDE EDGE NAILING PER PLAN INTO TOP AND BOTTOM PLATE.
7. PROVIDE PLYWOOD EDGE NAILING PER PLAN ALONG LENGTH OF KINGSTUD EACH SIDE OF OPENING.

16 SHEAR TRANSFER AROUND WINDOW OPENING

1. ROOF RAFTERS PER PLAN.
2. 2X NAILER WITH (3) 16d NAILS INTO CENTER OF EACH RAFTER BELOW.
3. ROOF SHEATHING PER PLAN.

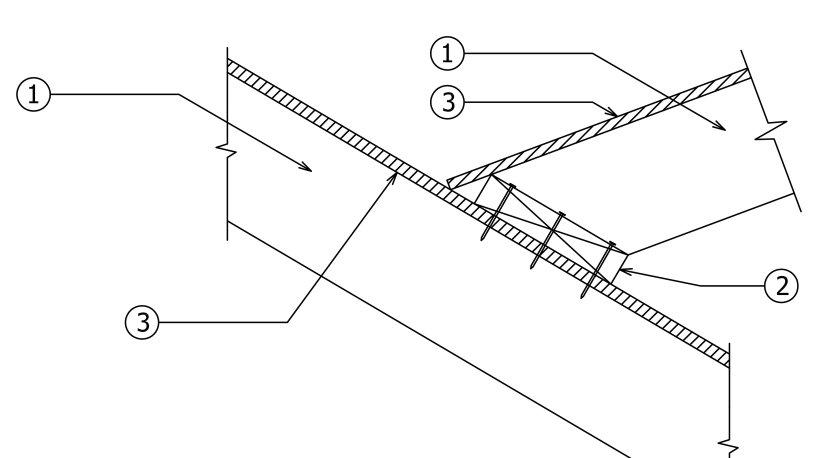

12 CALIFORNIA ROOF FRAMING

1. PROVIDE 'LSTA36' STRAP OVER SHEATHING FROM END ROOF RAFTER TO RAFTER.
2. NEW ROOF SHEATHING PER PLAN OVER NEW ROOF RAFTERS PER PLAN.
3. NEW ROOF RAFTER OVER WALL WITH EDGE NAILING FROM ROOF SHEATHING.
4. NEW FLUSH RIDGE BEAM PER PLAN.
5. NEW KING POST PER PLAN WITH 'A35' CLIP EACH SIDE TO HEADER BELOW.
6. NEW HEADER PER PLAN.

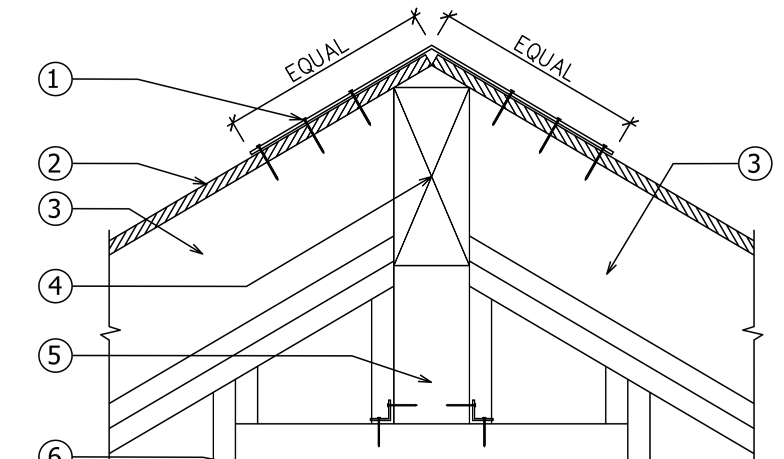

8 KINGPOST CONNECTION

1. DOUBLE TOP PLATES WITH 4' MINIMUM PLATE SPLICE WITH (10)10d NAILS PER SPLICE.
2. KINGSTUD ALONGSIDE POST PER PLAN TO SUPPORT DROP BEAM.
3. INSTALL 'MSTI36' STRAP FROM BEAM TO PLATES. OK TO INSTALL AT FACE OF BEAM TO TOP PLATE.
4. DROP BEAM PER PLAN.
5. TRIMMER PER PLAN WITH 'LTP4 BOTH SIDES TO DROP BEAM.

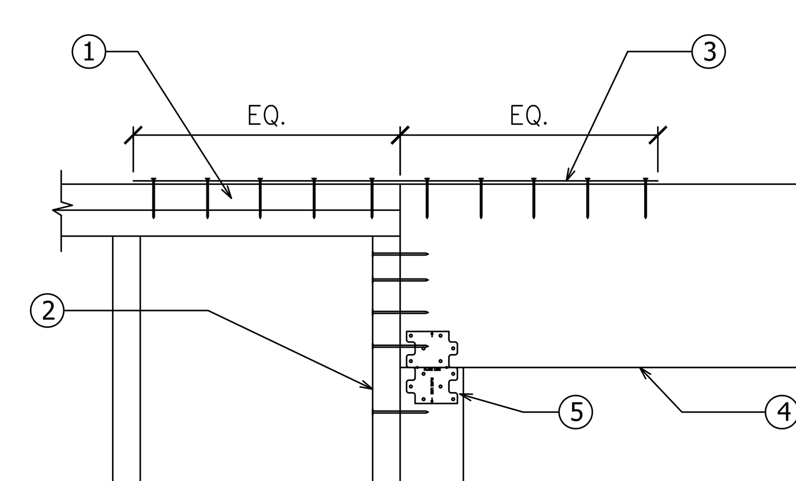

4 BEAM TO WALL CONNECTION

THESE PLANS ARE NOT TO BE USED FOR CONSTRUCTION UNLESS THEY HAVE BEEN STAMPED AS APPROVED BY THE BUILDING DEPARTMENT AND THERE IS A WET SIGNATURE ACROSS ENGINEERS STAMP. THESE PLANS ARE NOT TO BE REPRODUCED WITHOUT PERMISSION BY ARMSTRONG ENGINEERING & DRAFTING INC.

no.	REVISION	DATE

STRUCTURAL DETAILS

ARMSTRONG ENGINEERING
& DRAFTING, INC.
33504 Magnetite Street
Menifee, CA. 92584
(714)225-7056
Scott@ArmstrongEngineering.net

CIRKS RESIDENCE
3542 VENTURE DRIVE
HUNTINGTON BEACH, CA. 92649

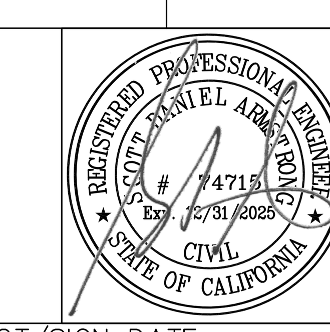

PLOT/SIGN DATE: 03/11/2024
SCALE: N.T.S.
JOB #: 2024–002
REVISION: #
SHEET #: S-4

1. FLUSH BEAM PER PLAN WITH 8" MINIMUM BEARING ON TOP PLATES. ATTACH TO TOP PLATES WITH 'PC46' POST CAP.
2. FLUSH BEAM PER PLAN WITH 'HUCQ412' HANGER TO FLUSH BEAM.
3. DOUBLE TOP PLATES WITH 4' MINIMUM LAP WITH (10)10d NAILS PER PLATE SPLICE.
4. POST PER PLAN WITH 'LTP4' CLIPS BOTH SIDES TO PLATE ABOVE.

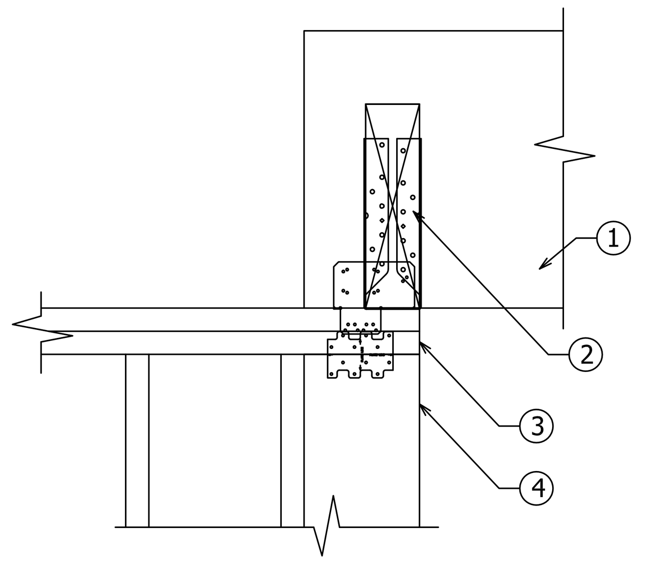

36 BEAM TO POST CONNECTION

1. POST PER PLAN WITH 'CBSQ66-SDS2' COLUMN BASE. BEND A #3 BAR THROUGH BOTTOM STIRRUP OF POST BASE INTO FOOTING.
2. CONCRETE SLAB PER PLAN.
3. CONCRETE PAD FOOTING PER PLAN CENTER BELOW POST ABOVE.

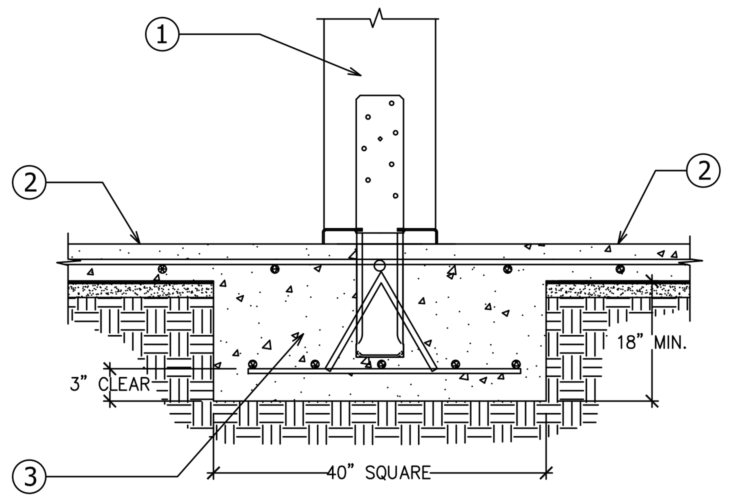

32 POST CONNECTION

1. FLUSH BEAM PER PLAN.
2. PROVIDE 'BC46' POST CAP ON TOP OF PLATES TO FLUSH BEAMS.
3. POST PER PLAN CENTERED BELOW FLUSH BEAMS. STRAP BEAMS TOGETHER WITH 'ST6224' STRAP AT FACE.

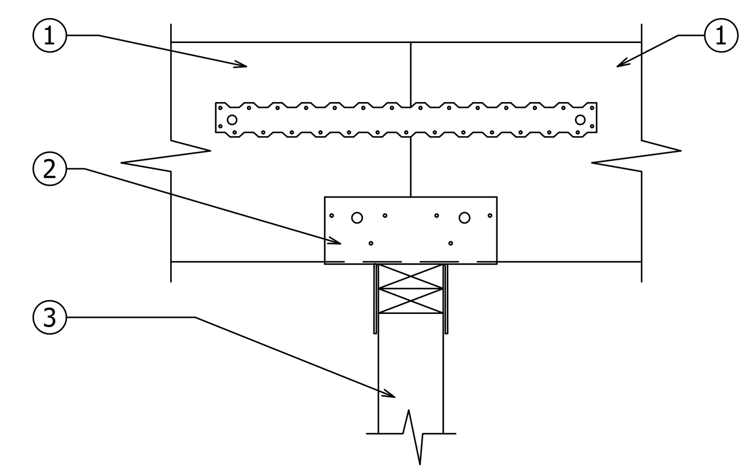

28 POST TO BEAM CONNECTION

1. ROOF SHEATHING OVER RAFTERS PER PLAN.
2. 8d NAILS @ 6" O.C. INTO FULL DEPTH BLOCKING.
3. OVERHANG AND FASCIA TO MATCH EXISTING.
4. PLYWOOD EDGE NAILING PER PLAN WHERE OCCURS.
5. PLYWOOD PER PLAN WHERE OCCURS OVER 2X4 STUDS SPACED AT 16" o.c. MAX.
6. PROVIDE 'A35' CLIPS SPACED AT 16" O.C.
7. CEILING JOIST PER PLAN WITH (5)16d NAILS INTO EACH RAFTER.
8. 2x4 TOP PLATES WITH MINIMUM 4' LAP WITH (10)16d NAILS PER SPLICE.
9. TRELLIS MEMBERS PER PLAN. HANG FROM FASCIA WITH 'HUC66' HANGERS. SCREW FASCIA TO EACH RAFTER TAIL WITH (3)#10X4" LONG EXTERIOR GRADE DECKING SCREWS.

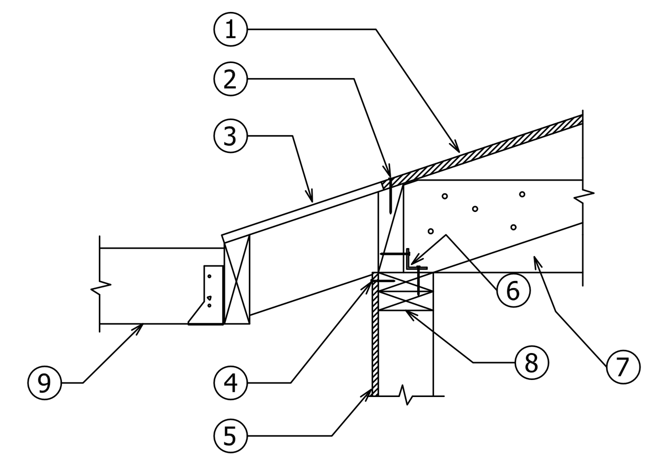

24 ROOF CONNECTION DETAIL

1. FLUSH BEAM PER PLAN.
2. PROVIDE 'A35' CLIP EACH SIDE FROM FLUSH BEAM TO TOP PLATE.
3. DOUBLE TOP PLATES WITH MINIMUM 4' LAP WITH (10) 16d NAILS PER SPLICE.
4. POST PER PLAN CENTER BELOW FLUSH BEAM WITH 'LTP4' CLIP TO TOP PLATES.

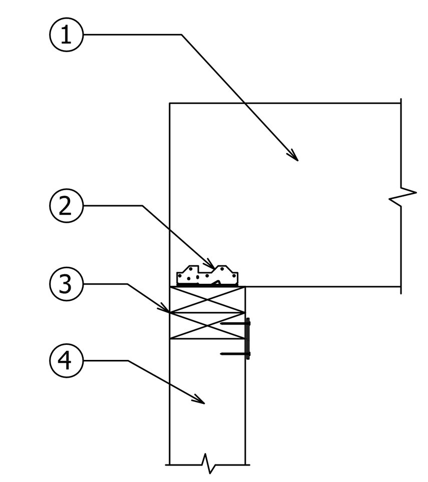

20 BEAM CONNECTION DETAIL

1. NEW TRIMMER PER PLAN WITH 'CBSQ46-SDS2' AT BASE.
2. NEW FOUNDATION PER PLAN.
3. PROVIDE 18" LONG #4 BAR BENT THROUGH BASE OF 'CBSQ'.

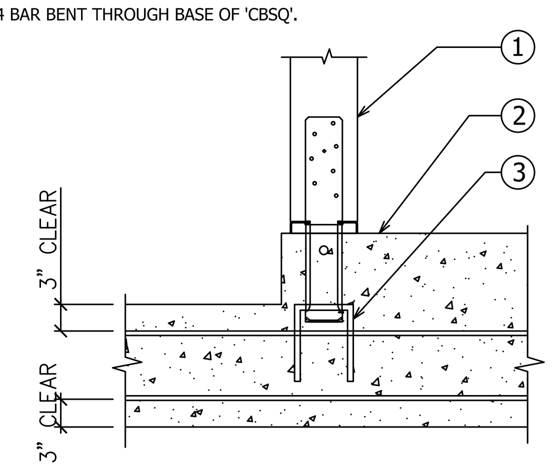

37 FOUNDATION CONNECTION

1. ROOF SHEATHING OVER RAFTERS PER PLAN.
2. 8d NAILS @ 6" O.C. INTO FULL DEPTH BLOCKING.
3. OVERHANG AND FASCIA TO MATCH EXISTING.
4. DROP BEAM PER PLAN.
5. TRELLIS MEMBERS PER PLAN. HANG FROM FASCIA WITH 'HUC66' HANGERS. SCREW FASCIA TO EACH RAFTER TAIL WITH (3)#10X4" LONG EXTERIOR GRADE DECKING SCREWS.
6. PROVIDE 'A35' CLIPS SPACED AT 16" O.C. FROM BLOCKING TO DROP BEAM.
7. CEILING JOIST PER PLAN WITH (5)16d NAILS INTO EACH RAFTER.

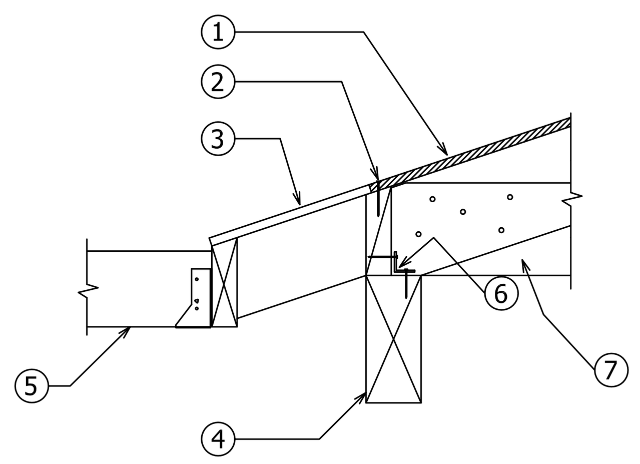

33 ROOF CONNECTION DETAIL

1. NEW FLUSH BEAM PER PLAN.
2. PROVIDE 'LTP4' AT SIDE OF BEAM TO TOP PLATE AND 'A35' ON OTHER SIDE TO TOP PLATE.
3. EXISTING 2X4 TOP PLATES WITH MINIMUM 4' LAP WITH (8)16d NAILS MIN PER SPLICE.
4. POST PER PLAN BELOW FLUSH BEAM.

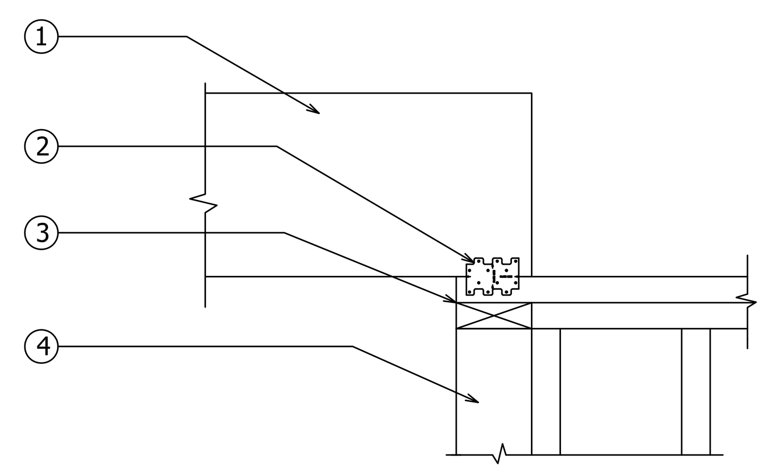

29 BEAM TO POST CONNECTION

1. POST PER PLAN WITH 'CBSQ46-SDS2' COLUMN BASE. BEND A #3 BAR THROUGH BOTTOM STIRRUP OF POST BASE INTO FOOTING.
2. CONCRETE SLAB PER PLAN.
3. CONCRETE PAD FOOTING PER PLAN CENTER BELOW POST ABOVE.

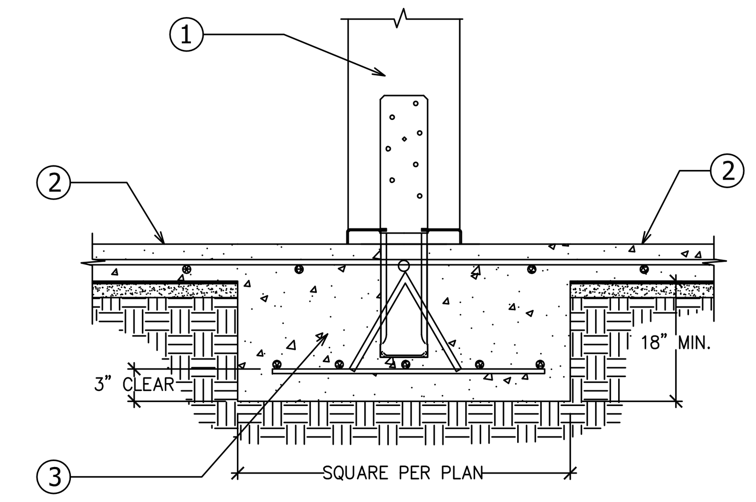

25 FOOTING CONNECTION

1. NEW ROOF SHEATHING AND RAFTERS PER PLAN.
2. PROVIDE 8d EDGE NAILING @ 6" O.C. INTO FULL DEPTH BLOCKING.
3. OVERHANG AND FASCIA TO MATCH EXISTING.
4. DROP BEAM PER PLAN TO SUPPORT ROOF RAFTERS.
5. PROVIDE 'A35' CLIPS FROM BLOCKING TO DROP BEAM AT 16" O.C.
6. INSTALL 'H1' TIES AT 48" O.C. FROM RAFTER TO DROP BEAM.

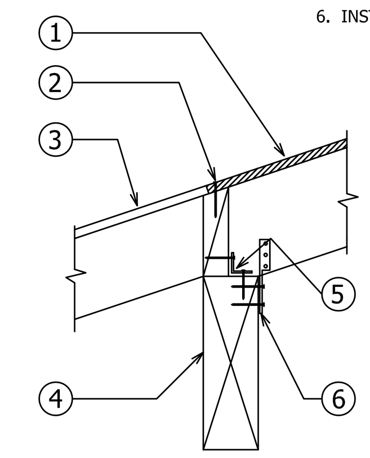

21 ROOF CONNECTION DETAIL

1. NEW ROOF SHEATHING OVER RAFTERS PER PLAN.
2. 8d COMMON NAILS @ 6" O.C. INTO RAFTER OVER WALL.
3. ROOF RAFTERS PER PLAN.
4. DOUBLE TOP PLATES FOR CRIPPLE WALL.
5. PROVIDE 2X4 CRIPPLE WALL ABOVE ROOF SHEATHING.
6. SHEAR PANEL PER PLAN (RUN TO ROOF).
7. PROVIDE 'A35' CLIPS @ 8" O.C. FROM RAFTER/BLOCK TO PLATE.
8. EXISTING ROOF RAFTERS AND SHEATHING TO REMAIN.

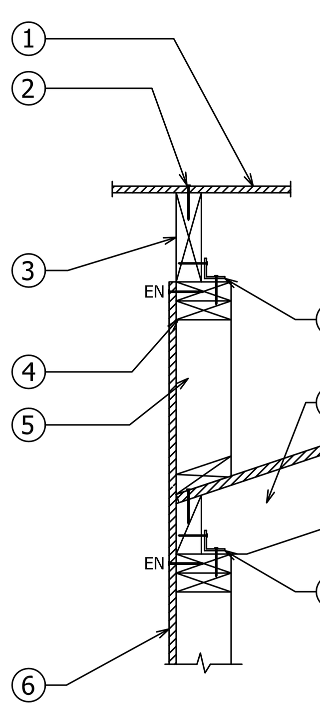

38 SHEAR TRANSFER DETAIL

1. ROOF RAFTER PER PLAN WITH EDGE NAILING FROM ROOF SHEATHING.
2. PROVIDE 'LSTA36' STRAP WITH EQUAL NUMBER OF 10d NAILS INTO RAFTER AND DROP BEAM.
3. ROOF RAFTERS PER PLAN WITH FULL DEPTH BLOCKING BETWEEN.

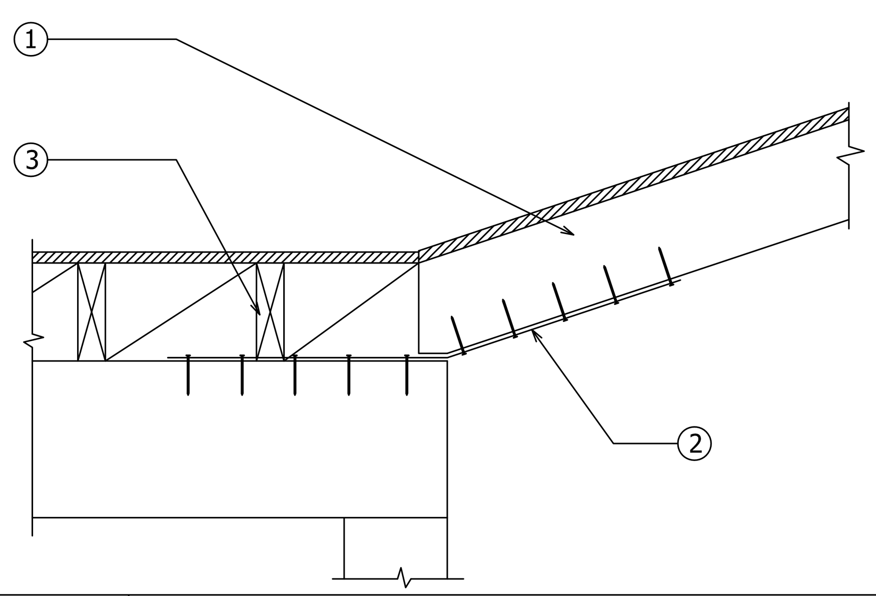

34 DRAG TIE CONNECTION

1. FLUSH BEAM PER PLAN.
2. PROVIDE 'BC44' POST CAP ON TOP OF PLATES TO FLUSH BEAMS.
3. POST PER PLAN CENTERED BELOW FLUSH BEAMS. STRAP BEAMS TOGETHER WITH 'ST6224' STRAP AT FACE.

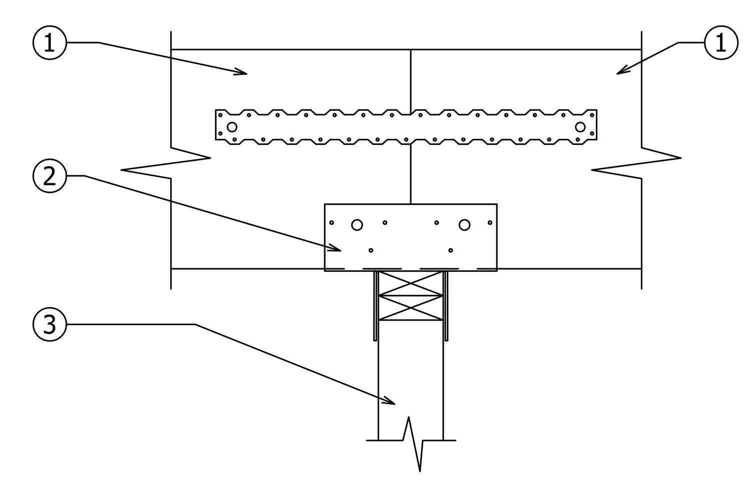

30 BEAM CONNECTION

1. HIP BEAM PER PLAN TO CARRY RAFTERS.
2. KING POST PER PLAN WITH 'LTP4' CLIP EACH SIDE TO HIP AND 'A35' EACH SIDE TO PLATE BELOW.
3. POST PER PLAN BELOW DOUBLE TOP PLATES.

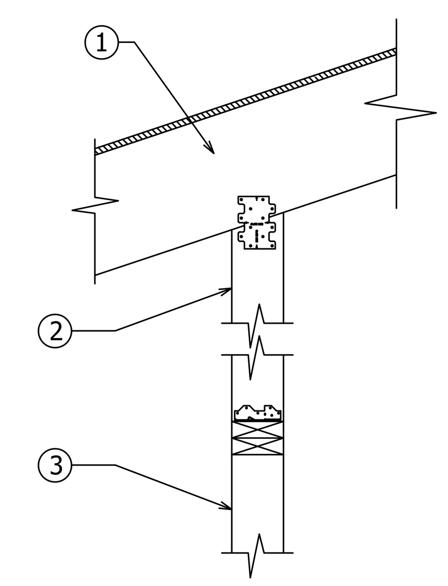

26 KINGPOST CONNECTION

1. ROOF RAFTER INLINE WITH WALL FOR ATTACHMENT OF 'CS16' STRAPPING.
2. PROVIDE CONTINUOUS 'CS16' STRAP WITH 10d NAILS INTO BLOCKING OVER ROOF SHEATHING.
3. ROOF RAFTERS PER PLAN.
4. 2X6 BLOCKING FOR THE LENGTH OF THE 'CS16' STRAP.

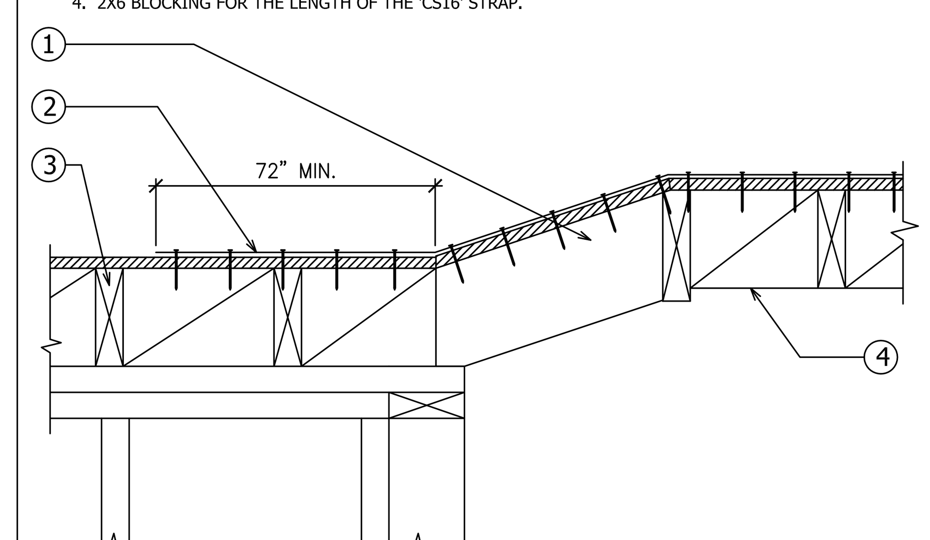

22 DRAG TIE CONNECTION

1. POST PER PLAN WITH EDGE NAILING FROM SHEAR PANEL.
2. SHEAR PANEL PER PLAN WHERE OCCURS.
3. FLOOR SHEATHING PER PLAN.
4. SHEAR TRANSFER PER PLAN.
5. STRAP PER PLAN FROM POST TO POST OR STRONGWALL BELOW.

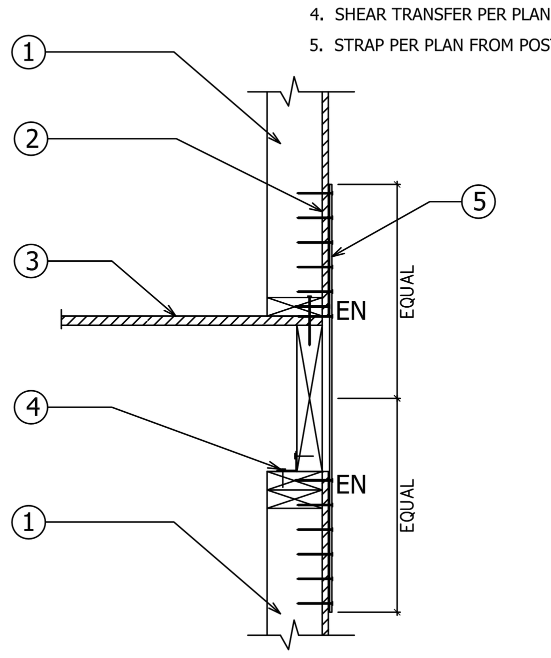

39 STRAP AT POST

1. FLUSH BEAM PER PLAN.
2. PROVIDE 'A35' CLIP EACH SIDE FROM FLUSH BEAM TO TOP PLATE.
3. DOUBLE TOP PLATES WITH MINIMUM 4' LAP WITH (10) 16d NAILS PER SPLICE.
4. POST PER PLAN CENTER BELOW FLUSH BEAM WITH 'LTP4' CLIP TO TOP PLATES.

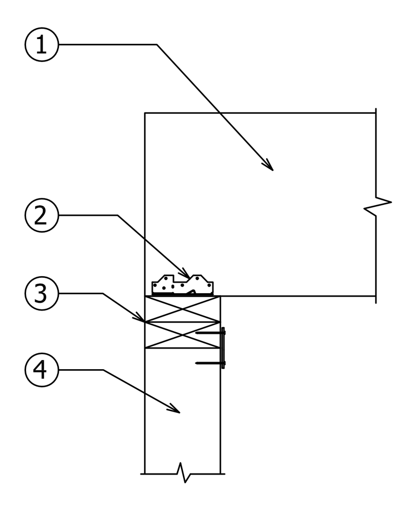

35 BEAM CONNECTION DETAIL

1. VALLEY BEAM PER PLAN WITH 'LS90' TO RIDGE BEAM.
2. FLUSH BEAM PER PLAN TO CARRY KINGPOST AND CEILING JOISTS.
3. HIP BEAM PER PLAN WITH 'LS90' TO VALLEY BEAM.
4. FLUSH RIDGE BEAM PER PLAN.
5. INSTALL 4X10 KINGPOST WITH 'A35' EACH SIDE TO FLUSH BEAM BELOW AND 'ST12' STRAPS TO RIDGE, VALLEY, AND HIP ABOVE.

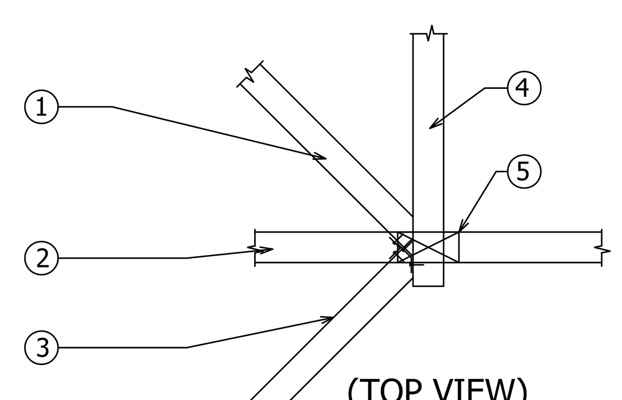

31 BEAM CONNECTION

1. ROOF RAFTER INLINE WITH WALL WITH EDGE NAILING FROM ROOF SHEATHING FOR ATTACHMENT OF SIMPSON 'CS16' STRAPPING.
2. PROVIDE CONTINUOUS 'CS16' STRAP WITH 10d NAILS INTO RAFTER AND BLOCKING OVER ROOF SHEATHING.
3. HIP BEAM PER PLAN.
4. 2X8 BLOCKING FOR THE LENGTH OF THE 'CS16' COIL STRAP.

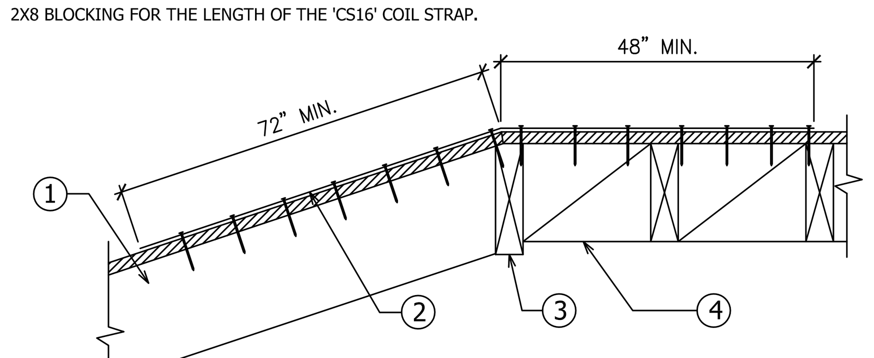

27 DRAG TIE CONNECTION

1. FLUSH BEAM PER PLAN.
2. TRELLIS MEMBERS PER PLAN WITH 'HUC66' HANGERS TO FLUSH BEAM.

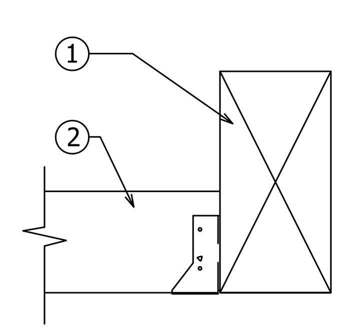

23 ROOF CONNECTION

THESE PLANS ARE NOT TO BE USED FOR CONSTRUCTION UNLESS THEY HAVE BEEN STAMPED AS APPROVED BY THE BUILDING DEPARTMENT AND THERE IS A WET SIGNATURE ACROSS ENGINEERS STAMP. THESE PLANS ARE NOT TO BE REPRODUCED WITHOUT PERMISSION BY ARMSTRONG ENGINEERING & DRAFTING INC.

no.	REVISION	DATE

STRUCTURAL DETAILS

ARMSTRONG ENGINEERING
& DRAFTING, INC.
33504 Magnetite Street
Menifee, CA. 92584
(714)323-7056
Scott@ArmstrongEngineering.net

CIRKS RESIDENCE

3542 VENTURE DRIVE
HUNTINGTON BEACH, CA. 92649

REGISTERED PROFESSIONAL ENGINEER
SCOTT DANIEL ARMSTRONG
No. 74715
CIVIL
STATE OF CALIFORNIA

PLOT/SIGN DATE: 03/11/2024
SCALE: N.T.S.
JOB #: 2024-002
REVISION: #
SHEET #:

S-5

1. SHEAR PANEL PER PLAN.
2. SILL PLATE NAILING PER PLAN INTO CENTER OF BLOCKING BELOW.
3. CONTINUOUS DECK JOISTS PER PLAN. NOTCH AT STEP FROM FLOOR HEIGHT TO DECK HEIGHT. MAX NOTCH OF 1-5/8" AT THIS LOCATION. DO NOT OVER CUT THE DEPTH OF THE JOIST FOR NOTCH.
4. INSTALL 2X12 BLOCKING BELOW WALL LINE ABOVE.
5. INSTALL 2X4 BLOCKS ALONGSIDE FULL DEPTH BLOCKING. NAIL TO FULL DEPTH BLOCKS WITH (2)16d FACE NAILS AT 8" O.C.

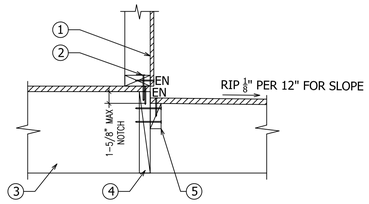

56 DECK JOIST CONNECTION

1. 3X8 NAILER WITH 5/8"ø NELSON STUDS WELDED TO TOP @ 24" O.C. OK TO COUNTER SINK WASHER AND NUT INTO NAILER. PROVIDE EDGE NAILING FROM FLOOR SHEATHING INTO NAILER.
2. FLOOR SHEATHING AND FLOOR JOISTS PER PLAN. HANG FLOOR JOISTS WITH 'LUS210' HANGERS TO NAILER.
3. NEW STEEL FLUSH BEAM PER PLAN. PROVIDE SOLID WOOD FILLER WITH 5/8"ø NELSON STUDS WELDED AT 24" O.C. MAXIMUM EACH SIDE OF BEAM TO HANG FLOOR JOISTS.
   INSTALL 3/8" WEB STIFFENERS AT 48" O.C. EACH SIDE OF WEB AND AT PERPENDICULAR BEAMS WELDED TO WEB AND FLANGE WITH 1/4" FILLET WELD ALL AROUND.

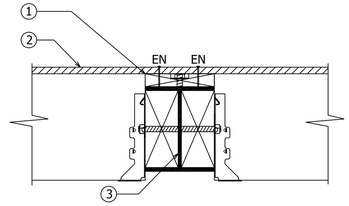

52 BEAM CONNECTION AT FLOOR

1. NEW FLUSH BEAM PER PLAN.
2. PROVIDE 'MST27' STRAP FROM BEAM TO TOP PLATE.
3. DOUBLE TOP PLATES WITH 4' MINIMUM LAP WITH (10) 16d NAILS PER PLATE SPLICE.
4. INSTALL (3)STUDS OR POST PER PLAN UNDER FLUSH BEAM.

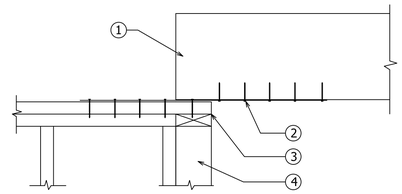

48 STRAP AT BEAM

1. EXISTING FLOOR JOISTS AND FLOOR SHEATHING TO REMAIN.
2. NEW TOP FLUSH BEAM PER PLAN TO CARRY FLOOR JOISTS.
3. NEW FLOOR JOISTS AND FLOOR SHEATHING PER PLAN. HANG FLOOR JOISTS FROM BEAM WITH 'LUS210' HANGERS.

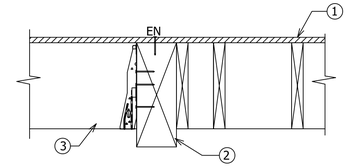

44 BEAM CONNECTION

1. POST PER PLAN WITH EDGE NAILING FROM SHEAR PANEL.
2. SHEAR PANEL PER PLAN WHERE OCCURS.
3. PROVIDE 'MST48' STRAP OVER SHEAR PANEL FROM POST TO BEAM.
4. FLOOR SHEATHING PER PLAN.
5. FLUSH BEAM/RIM PER PLAN.

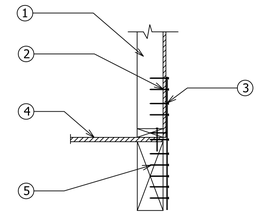

40 STRAP AT POST

1. NEW FLOOR JOISTS AND FLOOR SHEATHING PER PLAN. HANG FLOOR JOISTS FROM BEAM WITH 'LUS210' HANGERS.
2. FLUSH BEAM PER PLAN.
3. DECK JOISTS AND SHEATHING PER PLAN. HANG JOISTS FROM BEAM WITH 'IUS1.81/10' HANGERS.

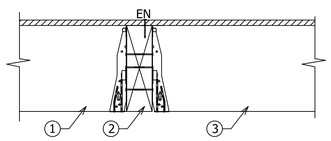

57 DECK CONNECTION

1. STUDS @ 16" O.C.
2. SILL PLATE NAILING PER PLAN INTO FULL DEPTH RIM.
3. EXISTING FLOOR SHEATHING AND FLOOR JOISTS TO REMAIN. BLOCK FIRST BAY AT 48" O.C. WITH FULL DEPTH BLOCKING.
4. EXISTING RIM OVER WALL WITH EDGE NAILING FROM FLOOR SHEATHING.
5. PROVIDE 'A35' CLIPS SPACED @ 16" O.C. THROUGHOUT ENTIRE WALL OR 'LTP4' ON EXTERIOR SIDE TO PLATE BELOW.
6. DOUBLE TOP PLATES WITH MINIMUM 4' LAP WITH (10) 16d NAILS PER SPLICE.
7. PLYWOOD SHEAR PANEL PER PLAN.
8. PLYWOOD EDGE NAILING PER PLAN.

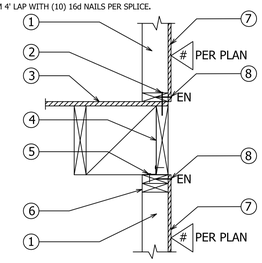

53 SHEAR TRANSFER DETAIL

1. NEW FLOOR JOISTS AND FLOOR SHEATHING PER PLAN. HANG FLOOR JOISTS FROM BEAM WITH 'LUS210' HANGERS.
2. INSTALL 3/8" WEB STIFFENER CENTERED BELOW EACH POST ABOVE (4-LOCATIONS TOTAL PER PLAN) WELDED TO WEB AND FLANGE OF BEAM BOTH SIDES.
6. BEARING WALL ABOVE WITH POST LOCATIONS PER PLAN.

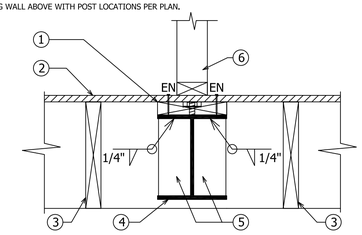

49 BEAM CONNECTION

1. EXISTING FLOOR JOISTS AND FLOOR SHEATHING TO REMAIN.
2. NEW TOP FLUSH BEAM PER PLAN TO CARRY FLOOR JOISTS.
3. NEW FLOOR JOISTS AND FLOOR SHEATHING PER PLAN. HANG FLOOR JOISTS FROM BEAM WITH 'LUS210' HANGERS.
4. INSTALL 'MST48' STRAP FROM PLATE TO PLATE CENTERED ON NEW TOP FLUSH BEAM.

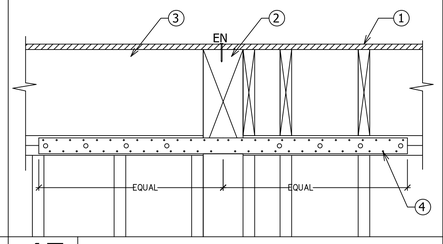

45 BEAM CONNECTION DETAIL

1. SHEAR PANEL PER PLAN WHERE OCCURS.
2. ATTACH 2X8 LEDGER TO CENTER OF EACH STUD WITH (3)16d FACE NAILS AT 16" O.C.
3. RAFTERS PER PLAN WITH 'LUS26' HANGERS TO LEDGER.
4. SILL PLATE NAILING PER PLAN INTO CENTER OF FULL DEPTH BLOCKING BELOW WALL.
5. FLOOR JOISTS AND FLOOR SHEATHING PER PLAN.
6. FULL DEPTH BLOCKING BETWEEN FLOOR JOISTS WITH EDGE NAILING FROM FLOOR SHEATHING. ATTACH BLOCKS TO BEAM BELOW WITH 'A35' CLIPS AT 16" O.C.
7. CONTINUOUS DROP BEAM PER PLAN.

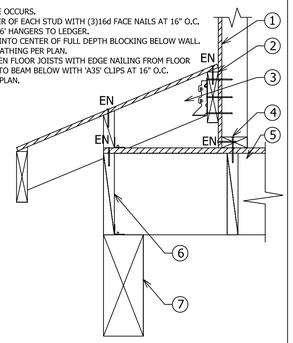

41 ROOF CONNECTION DETAIL

1. 1/2" THICK TEMPERED SAFETY GLAZING FOR GUARDRAIL. TOP AT 42" ABOVE FINISH FLOOR.
2. INSTALL ALUMINUM HEAVY BASE SHOE 'B75' BY CRLAURENCE CO. ATTACHED TO BEAM BELOW WITH 1/2" DIAMETER LAG SCREWS @ 12" O.C. WITH 6" MINIMUM EMBEDMENT INTO CENTER OF JOISTS OR BLOCKING BELOW. PREDRILL WITH 1/4" DIAMETER DRILL BIT FOR DEPTH OF BOLT.
3. INSTALL CONTINUOUS FLUSH BEAM PER PLAN TO CARRY DECK JOISTS.
4. INSTALL 'HU7' HANGERS FROM DECK JOISTS TO FLUSH BEAM.
5. CONTINUOUS DECK JOIST PER PLAN WITH 3/8" PER 12" RIP AT TOP FOR DRAINAGE. OK TO NOTCH AT END FOR TROUGH DRAIN TO BE INSTALLED.

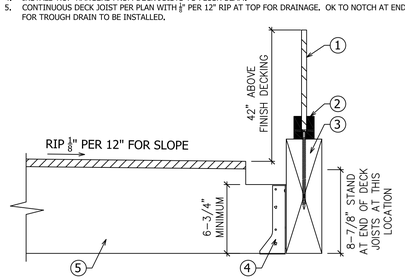

58 DECK JOIST CONNECTION

1. EXISTING FLOOR SHEATHING TO REMAIN. PROVIDE EDGE NAILING INTO NEW WOOD NAILER OVER STEEL.
2. FULL WIDTH 3X8 NAILER WITH 5/8"ø NELSON STUDS AT 24" O.C. OK TO COUNTER SINK WASHER AND NUT INTO NAILER.
3. NEW FLUSH STEEL BEAM PER PLAN.
4. 1/4" THICK X 4" WIDE X 18" LONG STEEL PLATE WITH (2)5/8"ø MACHINE BOLTS THROUGH WOOD POST.
5. POST PER PLAN.
6. (2)5/8"ø MACHINE BOLTS.
7. 1/4" THICK X 4" WIDE STEEL PLATE WITH (2)5/8"ø MACHINE BOLTS THROUGH WOOD POST.
8. PROVIDE 3/8" THICK WEB STIFFENER EACH SIDE OF BEAM WEB WELDED TO WEB AND FLANGE WITH 1/4" FILLET WELD. ALSO INSTALL WEB STIFFENER EACH SIDE OF BEAM CENTERED BELOW POSTS ABOVE(4-LOCATIONS TOTAL).
9. PROVIDE SOLID WOOD FILLER WITH 5/8"ø NELSON STUDS WELDED AT 24" O.C. MAXIMUM EACH SIDE OF BEAM TO HANG FLOOR JOISTS. INSTALL 3/8" WEB STIFFENERS AT 48" O.C. EACH SIDE OF WEB AND AT PERPENDICULAR BEAMS WELDED TO WEB AND FLANGE WITH 1/4" FILLET WELD ALL AROUND.

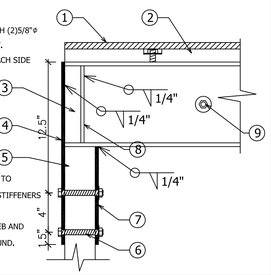

54 BEAM TO POST

1. EXISTING FLOOR SHEATHING TO REMAIN. PROVIDE EDGE NAILING INTO NEW WOOD NAILER OVER STEEL.
2. FULL WIDTH 3X8 NAILER WITH 5/8"ø NELSON STUDS AT 24" O.C. OK TO COUNTER SINK WASHER AND NUT INTO NAILER.
3. NEW FLUSH STEEL BEAM PER PLAN.
4. 1/4" THICK X 4" WIDE X 18" LONG STEEL PLATE WITH (2)5/8"ø MACHINE BOLTS THROUGH WOOD POST.
5. POST PER PLAN.
6. (2)5/8"ø MACHINE BOLTS.
7. 1/4" THICK X 4" WIDE STEEL PLATE WITH (2)5/8"ø MACHINE BOLTS THROUGH WOOD POST.
8. PROVIDE 3/8" THICK WEB STIFFENER EACH SIDE OF BEAM WEB WELDED TO WEB AND FLANGE WITH 1/4" FILLET WELD. ALSO INSTALL WEB STIFFENER EACH SIDE OF BEAM CENTERED BELOW POSTS ABOVE(4-LOCATIONS TOTAL).

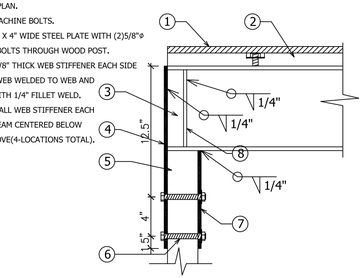

50 BEAM CONNECTION

1. NEW TOP FLUSH BEAM PER PLAN WITH EDGE NAILING FROM FLOOR SHEATHING.
2. INSTALL 'MST48' STRAP FROM BEAM TO BEAM IF SPLICED OVER POST.
3. POST PER PLAN WITH 'CCQ' COLUMN CAP TO BEAMS ABOVE. IF BEAM IS RUN CONTINUOUS IT IS OK TO ELIMINATE THE STRAP AT FACE OF BEAMS.

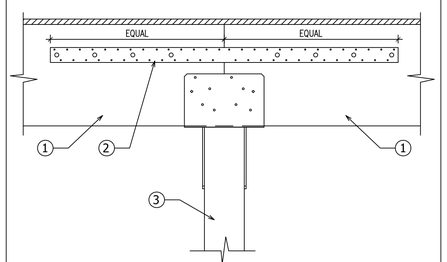

46 BEAM TO POST CONNECTION

1. ROOF SHEATHING AND RAFTERS PER PLAN. INSTALL FULL DEPTH BLOCKING BETWEEN RAFTERS OVER FLOOR SHEATHING.
2. FLOOR SHEATHING AND FLOOR JOISTS PER PLAN. INSTALL FULL DEPTH BLOCKING BETWEEN JOISTS OVER DROP BEAM.
3. CONTINUOUS DROP BEAM PER PLAN.
4. TRIMMER PER PLAN WITH 'CCQ68' TO BEAM.

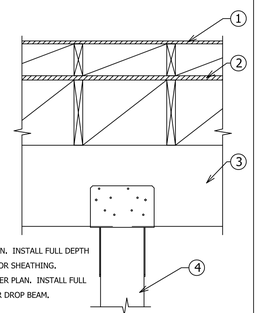

42 TRIMMER CONNECTION

1. FLUSH BEAM PER PLAN WITH EDGE NAILING FROM FLOOR SHEATHING.
2. POST PER PLAN WITH 'BC6' TO BEAM ABOVE.

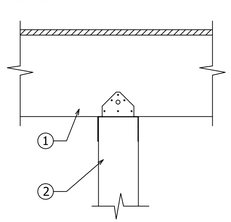

59 POST CONNECTION DETAIL

1. EXISTING FLOOR SHEATHING TO REMAIN. PROVIDE EDGE NAILING INTO NEW WOOD NAILER OVER STEEL. SEE DETAIL 70/S-7 FOR DRAG CONNECTION TO ADJACENT BEAM.
2. FULL WIDTH 3X8 NAILER WITH 5/8"ø NELSON STUDS AT 24" O.C. OK TO COUNTER SINK WASHER AND NUT INTO NAILER.
3. NEW FLUSH STEEL BEAM PER PLAN.
4. 1/4" THICK X 4" WIDE X 18" LONG STEEL PLATE WITH (2)5/8"ø MACHINE BOLTS THROUGH WOOD POST.
5. POST PER PLAN.
6. (2)5/8"ø MACHINE BOLTS.
7. 1/4" THICK X 4" WIDE STEEL PLATE WITH (2)5/8"ø MACHINE BOLTS THROUGH WOOD POST.
8. PROVIDE 3/8" THICK WEB STIFFENER EACH SIDE OF BEAM WEB WELDED TO WEB AND FLANGE WITH 1/4" FILLET WELD. ALSO INSTALL WEB STIFFENER EACH SIDE OF BEAM CENTERED BELOW POSTS ABOVE(4-LOCATIONS TOTAL).
9. PROVIDE SOLID WOOD FILLER WITH 5/8"ø NELSON STUDS WELDED AT 24" O.C. MAXIMUM EACH SIDE OF BEAM TO HANG FLOOR JOISTS. INSTALL 3/8" WEB STIFFENERS AT 48" O.C. EACH SIDE OF WEB AND AT PERPENDICULAR BEAMS WELDED TO WEB AND FLANGE WITH 1/4" FILLET WELD ALL AROUND.

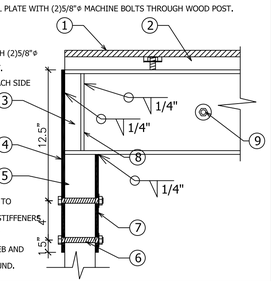

55 BEAM TO POST

1. FLOOR SHEATHING TO BE EDGE NAILED INTO 3X8 NAILER ON TOP OF STEEL BEAMS.
2. STEEL BEAM PER PLAN. INSTALL 3/8" WEB STIFFENERS AT 48" O.C. EACH SIDE OF WEB AND AT PERPENDICULAR BEAMS. INSTALL 3X8 NAILER ON TOP WITH 5/8"ø NELSON STUDS AT 24" O.C. OK TO COUNTER SINK WASHER AND NUT INTO NAILER.
3. INSTALL 1/4" THICK STEEL PLATE WITH (2)5/8"ø MACHINE BOLTS FOR ERECTION OF STEEL BEAMS. WELD PLATE TO WEB AND FLANGE OF BOTH BEAMS AFTER ERECTION WITH 3/8" FILLET WELD ALL AROUND.
4. STEEL BEAM PER PLAN CENTERED BELOW WALL ABOVE.
5. INSTALL 3/8" WEB STIFFENER CENTERED BELOW EACH POST ABOVE (4-LOCATIONS TOTAL PER PLAN) WELDED TO WEB AND FLANGE OF BEAM BOTH SIDES.

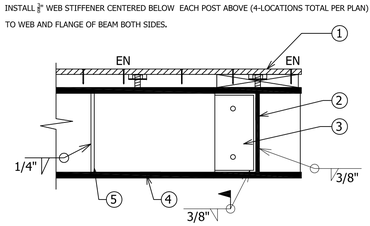

51 BEAM CONNECTION

1. FLOOR SHEATHING PER PLAN OVER FLOOR JOISTS PER PLAN.
2. FULL DEPTH JOIST OVER WALL WITH EDGE NAILING FROM FLOOR SHEATHING.
3. PROVIDE 'A35' CLIPS OR 'LTP4' CLIPS FROM JOIST TO TOP PLATE SPACED AT 16" O.C.
4. SHEAR PANEL PER PLAN WHERE OCCURS.
5. PROVIDE FULL DEPTH BLOCKING ONE-BAY EACH SIDE OF SHEAR WALL SPACED AT 48" O.C. FOR LENGTH OF WALL.

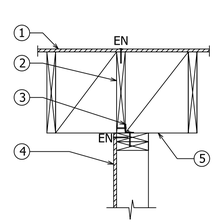

47 SHEAR TRANSFER DETAIL

1. ROOF SHEATHING AND RAFTERS PER PLAN. INSTALL FULL DEPTH BLOCKING BETWEEN RAFTERS OVER FLOOR SHEATHING.
2. FLOOR SHEATHING AND FLOOR JOISTS PER PLAN. INSTALL FULL DEPTH BLOCKING BETWEEN JOISTS OVER DROP BEAM.
3. CONTINUOUS DROP BEAM PER PLAN.
4. TRIMMER PER PLAN WITH 'ECCQ68' TO BEAM.

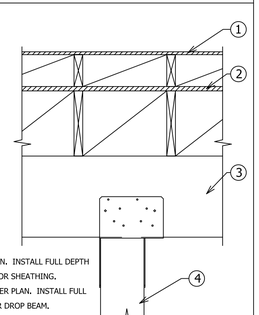

43 TRIMMER CONNECTION

THESE PLANS ARE NOT TO BE USED FOR CONSTRUCTION UNLESS THEY HAVE BEEN STAMPED AS APPROVED BY THE BUILDING DEPARTMENT AND THERE IS A WET SIGNATURE ACROSS ENGINEERS STAMP. THESE PLANS ARE NOT TO BE REPRODUCED WITHOUT PERMISSION BY ARMSTRONG ENGINEERING & DRAFTING INC.

no.	REVISION	DATE

ARMSTRONG ENGINEERING & DRAFTING, INC.
33504 Magnolia Street
Menifee, CA. 92584
(714)225-7056
Scott@ArmstrongEngineering.net

STRUCTURAL DETAILS

CIRKS RESIDENCE
3542 VENTURE DRIVE
HUNTINGTON BEACH, CA. 92649

REGISTERED PROFESSIONAL ENGINEER
SCOTT DANIEL ARMSTRONG
47151
EXP. 12/31/2025
CIVIL
STATE OF CALIFORNIA

PLOT/SIGN DATE: 03/11/2024
SCALE: N.T.S.
JOB #: 2024-002
REVISION: #
SHEET #: S-6

1. 1/2" THICK TEMPERED SAFETY GLAZING FOR GUARDRAIL. TOP AT 42" ABOVE FINISH FLOOR.
2. INSTALL ALUMINUM HEAVY BASE SHOE 'B7S' BY CRLAURENCE CO. ATTACHED TO BEAM BELOW WITH 1/2" DIAMETER LAG SCREWS @ 12" O.C. WITH 6" MINIMUM EMBEDMENT INTO CENTER OF JOISTS OR BLOCKING BELOW. PREDRILL WITH 1/4" DIAMETER DRILL BIT FOR DEPTH OF BOLT.
3. INSTALL 4X BLOCKING BETWEEN DECK JOISTS(RUN DECK JOISTS LONG TO END OF DECK WITH BLOCKING BETWEEN) ATTACHED WITH (5)SIMPSON SDS SCREWS WITH 3" EMBEDMENT.
4. INSTALL UP-SIDE DOWN 'HU7' HANGERS FROM DECK JOISTS TO BLOCKING.
5. CONTINUOUS CANTILEVERED DECK JOIST PER PLAN WITH $\frac{1}{8}$" PER 12" RIP AT TOP FOR DRAINAGE. OK TO NOTCH END OF JOIST FOR TROUGH DRAIN TO BE INSTALLED.

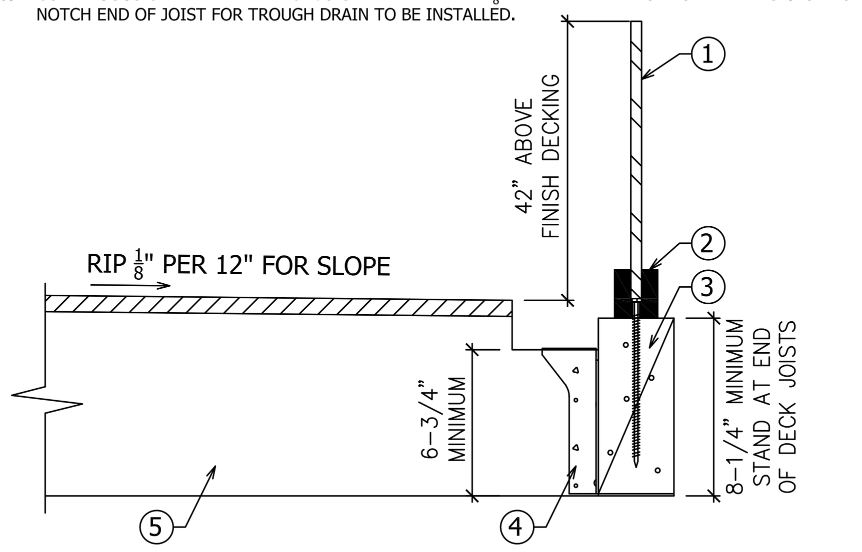

76 DECK CONNECTION

1. SHEAR PANEL PER PLAN.
2. SILL PLATE NAILING PER PLAN INTO CENTER OF BLOCKING BELOW.
3. EXISTING CANTILEVERED FLOOR JOISTS TO REMAIN WITH NEW CONTINUOUS DECK JOISTS PER PLAN ALONGSIDE FOR BEARING ON EXISTING EXTERIOR WALL. NOTCH NEW DECK JOISTS AT STEP FROM FLOOR HEIGHT TO DECK HEIGHT. MAX NOTCH OF 1" AT THIS LOCATION. DO NOT OVER CUT THE DEPTH OF THE JOIST FOR NOTCH.
4. INSTALL 2X12 BLOCKING BELOW WALL LINE ABOVE BETWEEN JOISTS
5. INSTALL 2X4 BLOCKS ALONGSIDE FULL DEPTH BLOCKING. NAIL TO FULL DEPTH BLOCKS WITH (2)16d FACE NAILS AT 8" O.C.

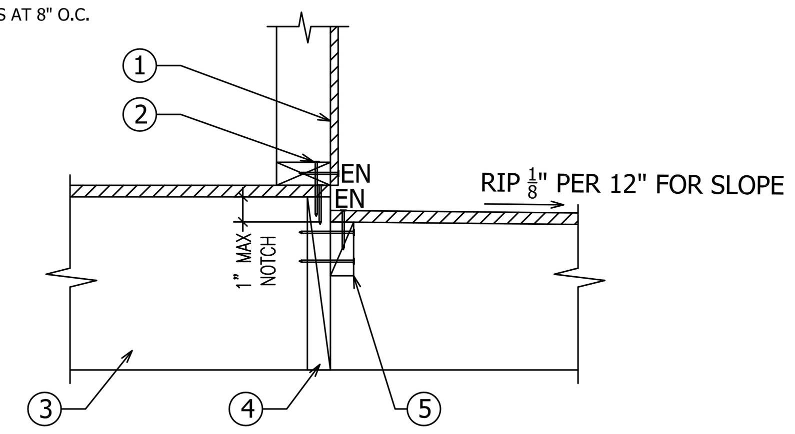

72 FLOOR CONNECTION

1. CONTINUOUS DECK JOISTS PER PLAN. NOTCH AT STEP FROM FLOOR HEIGHT TO DECK HEIGHT. MAX NOTCH OF 1" AT THIS LOCATION. DO NOT OVER CUT THE DEPTH OF THE JOIST FOR NOTCH.
2. INSTALL 2X12 BLOCKING BELOW WALL LINE ABOVE.
3. INSTALL 2X4 BLOCKS ALONGSIDE FULL DEPTH BLOCKING. NAIL TO FULL DEPTH BLOCKS WITH (2)16d FACE NAILS AT 8" O.C.

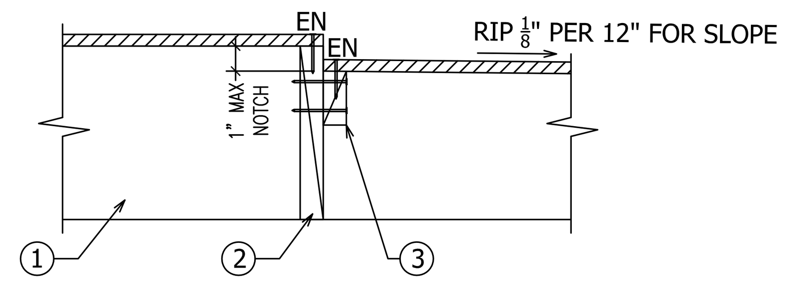

68 FLOOR CONNECTION

1. STUDS @ 16" O.C.
2. SILL PLATE NAILING PER PLAN INTO FULL DEPTH RIM.
3. EXISTING FLOOR SHEATHING AND FLOOR JOISTS TO REMAIN.
4. EXISTING RIM OVER WALL WITH EDGE NAILING FROM FLOOR SHEATHING.
5. PROVIDE 'A35' CLIPS SPACED @ 16" O.C. THROUGHOUT ENTIRE WALL OR 'LTP4' ON EXTERIOR SIDE TO PLATE BELOW.
6. DOUBLE TOP PLATES WITH MINIMUM 4' LAP WITH (10) 16d NAILS PER SPLICE.
7. PLYWOOD SHEAR PANEL PER PLAN.
8. PLYWOOD EDGE NAILING PER PLAN.

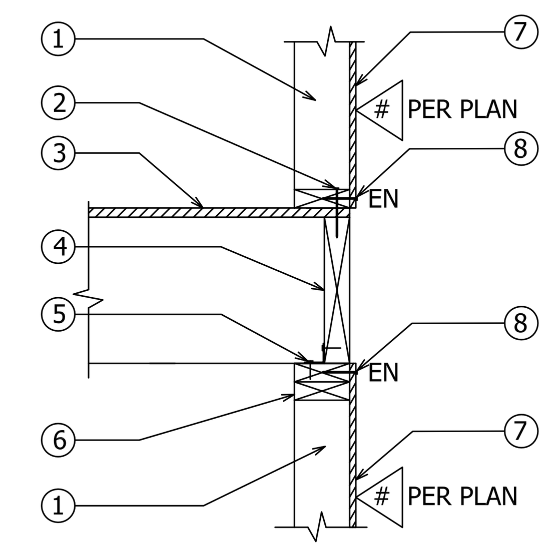

64 SHEAR TRANSFER CONNECTION

1. FLUSH BEAM PER PLAN.
2. PROVIDE 'BC46' POST CAP ON TOP OF PLATES TO FLUSH BEAMS.
3. POST PER PLAN CENTERED BELOW FLUSH BEAMS. STRAP BEAMS TOGETHER WITH 'ST6224' STRAP AT FACE.

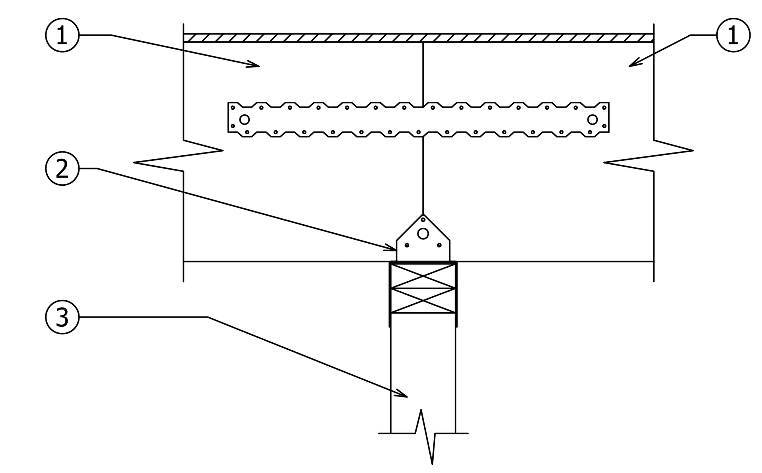

60 BEAM CONNECTION DETAIL

1. INSTALL 2X12 NAILER ON TOP OF STEEL BEAM ATTACHED WITH $\frac{5}{8}$"ϕ NELSON STUDS WELDED AT 24" O.C. RUN NAILER CONTINUOUS OUT LONG PAST STEEL FOR ATTACHMENT OF STRONG WALL.
2. STRONG WALL PER PLAN WITH ATTACHMENT TO PLATES PER PLAN.
3. NEW FLUSH STEEL BEAM PER PLAN.
4. 1/4" THICK X 4" WIDE X 22" LONG STEEL PLATE WITH (2)5/8"ϕ MACHINE BOLTS THROUGH WOOD POST.
5. POST PER PLAN.
6. (2)5/8"ϕ MACHINE BOLTS.
7. 1/4" THICK X 4" WIDE STEEL PLATE WITH (2)5/8"ϕ MACHINE BOLTS THROUGH WOOD POST.
8. INSTALL $\frac{3}{8}$" WEB STIFFENERS EACH SIDE OF WEB OVER POST AND AT 48" O.C. WELDED TO FLANGE AND WEB WITH $\frac{1}{4}$" FILLET ALL AROUND.

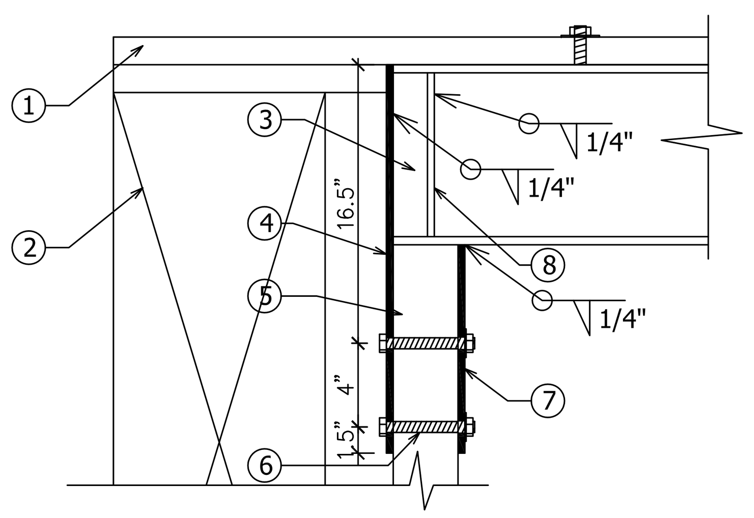

77 POST TO BEAM CONNECTION

1. CONTINUOUS BEAM PER PLAN. NOTCH AT STEP FROM FLOOR HEIGHT TO DECK HEIGHT. MAX NOTCH OF 1" AT THIS LOCATION. DO NOT OVER CUT THE DEPTH OF THE BEAM FOR NOTCH.
2. INSTALL 2X12 BLOCKING BELOW WALL LINE ABOVE.
3. INSTALL 2X4 BLOCKS ALONGSIDE FULL DEPTH BLOCKING. NAIL TO FULL DEPTH BLOCKS WITH (2)16d FACE NAILS AT 8" O.C.

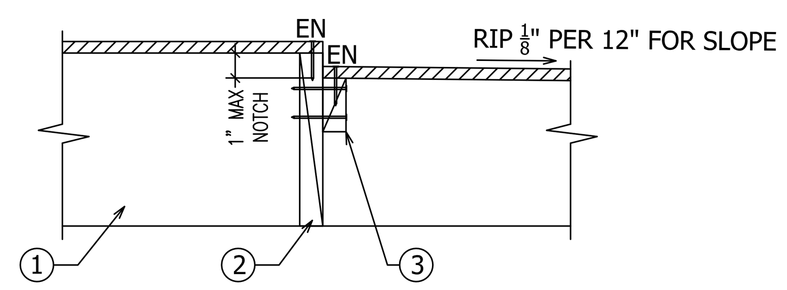

73 BEAM DETAIL

1. NEW FLUSH BEAM PER PLAN TO CARRY FLOOR AND DECK JOISTS.
2. BEAM PER PLAN WITH HANGER PER PLAN TO BEAM.
3. INSTALL 'ECCQ' CAP WITH ROTATED STRAPS FOR ATTACHMENT OF 5.25X11.25PSL TO 4X14 POST.
4. POST PER PLAN TO CARRY BEAMS.
5. INSTALL 'MST60' STRAP OVER FLOOR SHEATHING FOR ATTACHMENT OF BEAM TO 4X BLOCKING. INSTALL FULL DEPTH 4X BLOCKING BELOW STRAP ABOVE WITH 'LTP4' CLIPS AT 8" O.C. TO TOP PLATES INSTALLED OVER SHEAR PANEL.

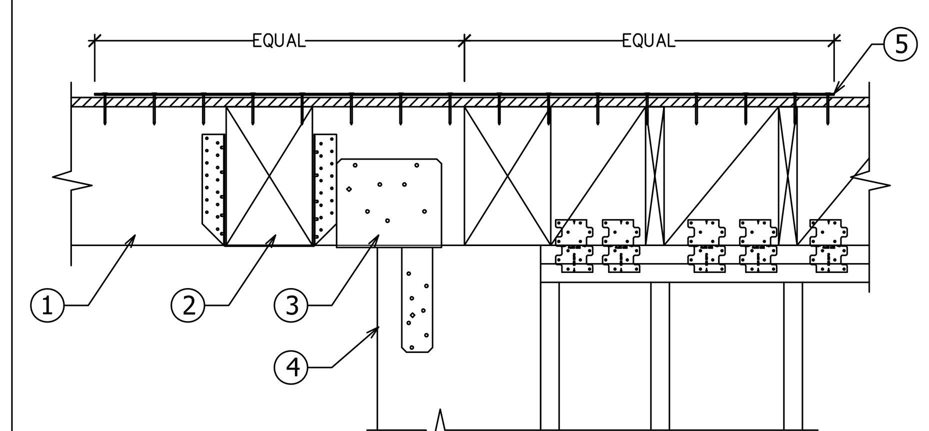

69 BEAM CONNECTION

1. STUDS @ 16" O.C.
2. SILL PLATE NAILING PER PLAN INTO FULL DEPTH RIM.
3. NEW DECK SHEATHING AND DECK JOISTS PER PLAN. BLOCK FIRST BAY AT 48" O.C. WITH FULL DEPTH BLOCKING.
4. NEW RIM OVER WALL WITH EDGE NAILING FROM FLOOR SHEATHING.
5. PROVIDE 'A35' CLIPS SPACED @ 16" O.C. THROUGHOUT ENTIRE WALL OR 'LTP4' ON EXTERIOR SIDE TO PLATE BELOW.
6. DOUBLE TOP PLATES WITH MINIMUM 4' LAP WITH (10) 16d NAILS PER SPLICE.
7. PLYWOOD SHEAR PANEL PER PLAN.
8. PLYWOOD EDGE NAILING PER PLAN.

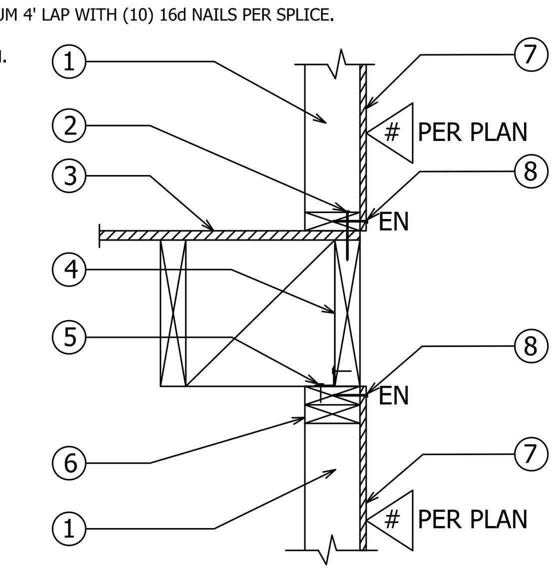

65 SHEAR TRANSFER DETAIL

1. STUDS @ 16" O.C.
2. SILL PLATE NAILING PER PLAN INTO FULL DEPTH RIM.
3. NEW FLOOR SHEATHING AND FLOOR JOISTS PER PLAN. BLOCK FIRST BAY AT 48" O.C. WITH FULL DEPTH BLOCKING.
4. NEW RIM OVER WALL WITH EDGE NAILING FROM FLOOR SHEATHING.
5. PROVIDE 'A35' CLIPS SPACED @ 16" O.C. THROUGHOUT ENTIRE WALL OR 'LTP4' ON EXTERIOR SIDE TO PLATE BELOW.
6. DOUBLE TOP PLATES WITH MINIMUM 4' LAP WITH (10) 16d NAILS PER SPLICE.
7. PLYWOOD SHEAR PANEL PER PLAN.
8. PLYWOOD EDGE NAILING PER PLAN.

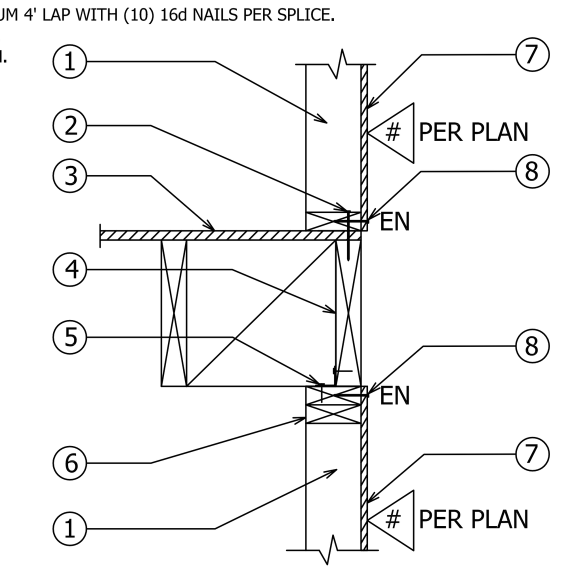

61 SHEAR TRANSFER DETAIL

1. NEW BEAM PER PLAN.
2. INSTALL 'ECCQ66SDS2.5' COLUMN CAP FROM POST TO BEAM.
3. POST PER PLAN TO CARRY FLUSH BEAM.

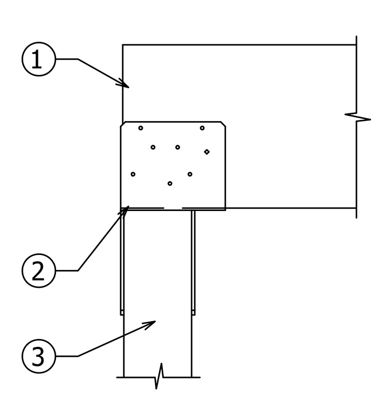

78 BEAM CONNECTION DETAIL

1. 10d NAILS @ 6" O.C. INTO FULL DEPTH BLOCKING.
2. FULL DEPTH BLOCKING FOR LENGTH OF STRAP WITH EDGE NAILING FROM DECK SHEATHING ABOVE.
3. INSTALL SIMPSON 'CS16' COIL STRAP WITH 10d NAILS INTO FULL DEPTH BLOCKING.
4. DECK JOISTS AND FLOOR SHEATHING PER PLAN.
5. DOUBLE TOP PLATES WITH MINIMUM 4' LAP WITH (10)10d NAILS PER SPLICE OR BEAM PER PLAN.

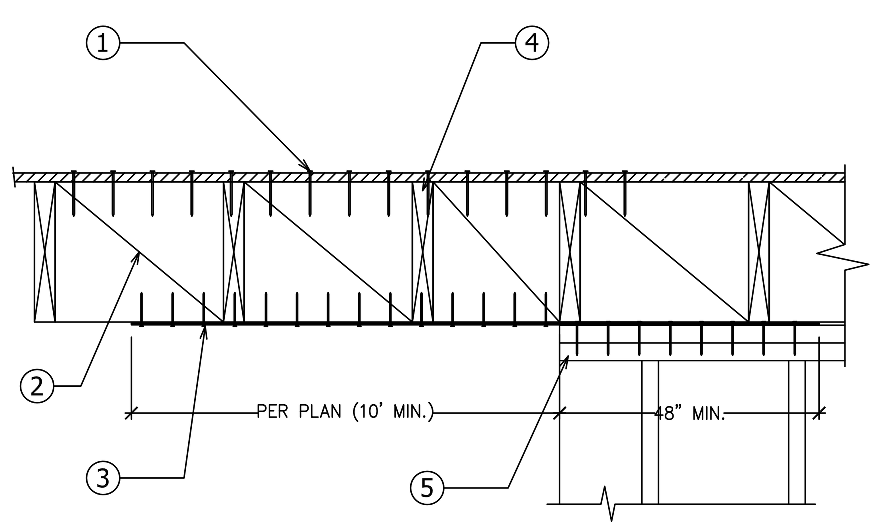

74 DRAG TIE DETAIL

1. NEW FLUSH BEAM PER PLAN TO CARRY FLOOR AND DECK JOISTS.
2. INSTALL 'ECCQ' CAP WITH ROTATED STRAPS FOR ATTACHMENT OF 5.25X11.25PSL TO 4X8 POST.
3. POST PER PLAN TO CARRY BEAM.
4. INSTALL 'MST60' STRAP OVER FLOOR SHEATHING FOR ATTACHMENT OF BEAM TO BEAM.
5. REFER TO DETAIL 55/S-6 FOR ATTACHMENT OF BEAM TO POST AND ADDITIONAL INFORMATION NOT SHOWN HERE.

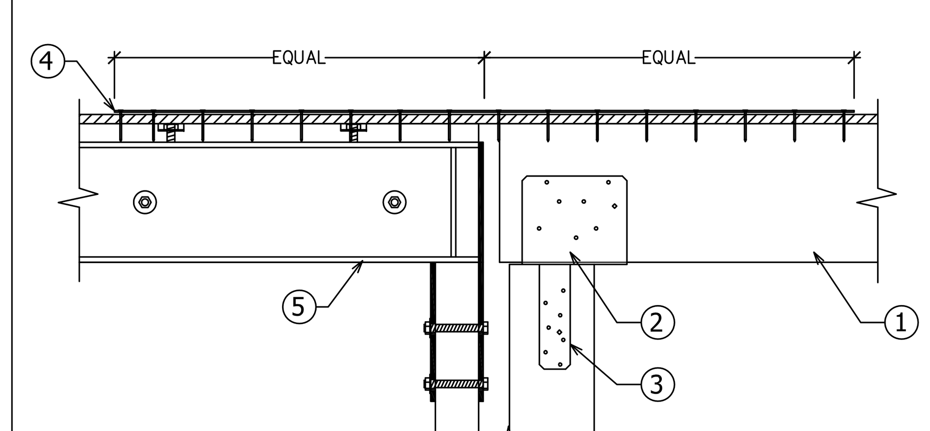

70 BEAM CONNECTION DETAIL

1. SHEAR PANEL PER PLAN.
2. INSTALL 2X BLOCKING WITH EDGE NAILING FROM SHEAR PANEL AND NAIL RAFTER TO BLOCKING WITH 16d NAILS AT 8" O.C.
3. NAIL RAFTER TO WALL WITH (3)16d FACE NAILS AT 16" O.C.
4. SILL PLATE NAILING PER PLAN INTO BEAM BELOW.
5. EXISTING BEAM TO REMAIN.
6. EXISTING FLOOR SHEATHING AND FLOOR JOISTS TO REMAIN.

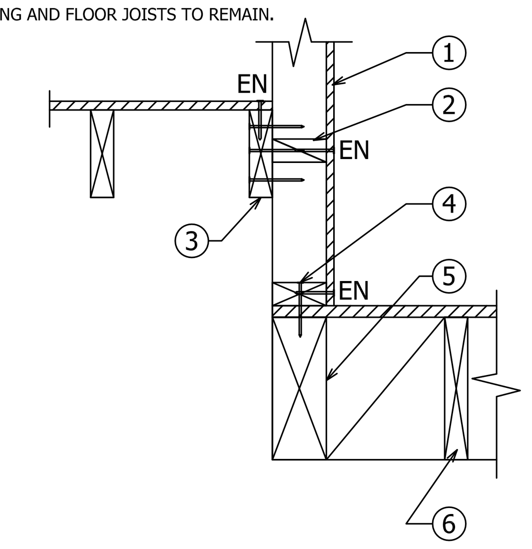

66 SHEAR TRANSFER CONNECTION

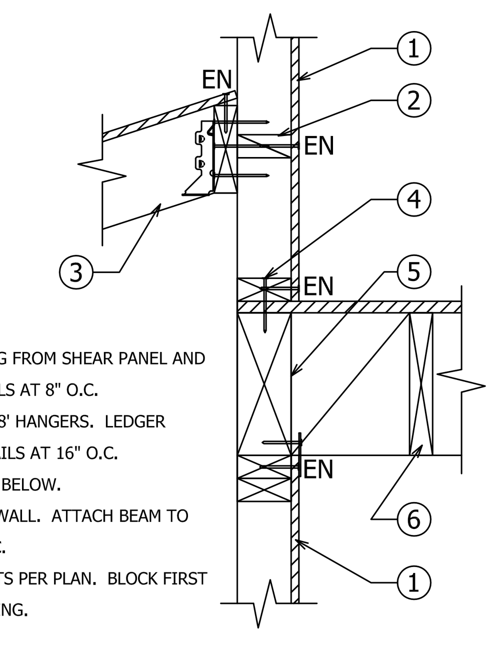

1. SHEAR PANEL PER PLAN.
2. INSTALL 2X BLOCKING WITH EDGE NAILING FROM SHEAR PANEL AND NAIL LEDGER TO BLOCKING WITH 16d NAILS AT 8" O.C.
3. HANG RAFTERS FROM LEDGER WITH 'LUS28' HANGERS. LEDGER ATTACHED TO WALL WITH (3)16d FACE NAILS AT 16" O.C.
4. SILL PLATE NAILING PER PLAN INTO BEAM BELOW.
5. NEW CONTINUOUS BEAM PER PLAN OVER WALL. ATTACH BEAM TO PLATE BELOW WITH 'LTP4' CLIPS AT 8" O.C.
6. NEW FLOOR SHEATHING AND FLOOR JOISTS PER PLAN. BLOCK FIRST BAY AT 48" O.C. WITH FULL DEPTH BLOCKING.

62 SHEAR TRANSFER DETAIL

1. CONTINUOUS FLUSH BEAM PER PLAN TO CARRY JOISTS.
2. DECK JOISTS PER PLAN WITH 'IUS' HANGERS TO BEAM.
3. FLUSH BEAM PER PLAN WITH HANGER PER PLAN TO BEAM.
4. OK TO NOTCH BEAM AT STEP FROM FLOOR TO DECK HEIGHT. MAXIMUM NOTCH OF APPROXIMATELY 1.5" AT THIS LOCATION. DO NOT OVER CUT THE DEPTH OF THE BEAM FOR NOTCH.

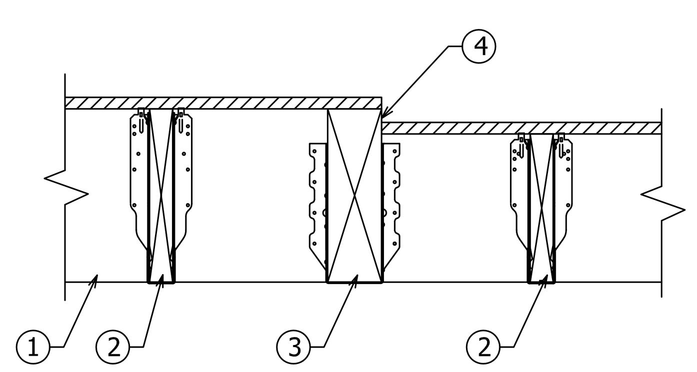

79 NOTCH DETAIL

1. DECK JOISTS AND SHEATHING PER PLAN. RIP TOP OF JOISTS $\frac{1}{8}$" PER 12" FOR DRAINAGE.
2. INSTALL 2X12 NAILER ON TOP OF STEEL BEAM ATTACHED WITH $\frac{5}{8}$"ϕ NELSON STUDS WELDED AT 24" O.C.
3. CONTINUOUS STEEL DROP BEAM PER PLAN.
4. INSTALL $\frac{3}{8}$" WEB STIFFENERS EACH SIDE OF WEB AT 48" O.C. WELDED TO FLANGE AND WEB WITH $\frac{1}{4}$" FILLET ALL AROUND.
5. FULL DEPTH BLOCKING BETWEEN JOIST OVER NAILER WITH EDGE NAILING FROM DECK SHEATHING. PROVIDE 'A35' CLIPS OR 'LTP4' CLIPS FROM BLOCKING TO NAILER AT 24" O.C.

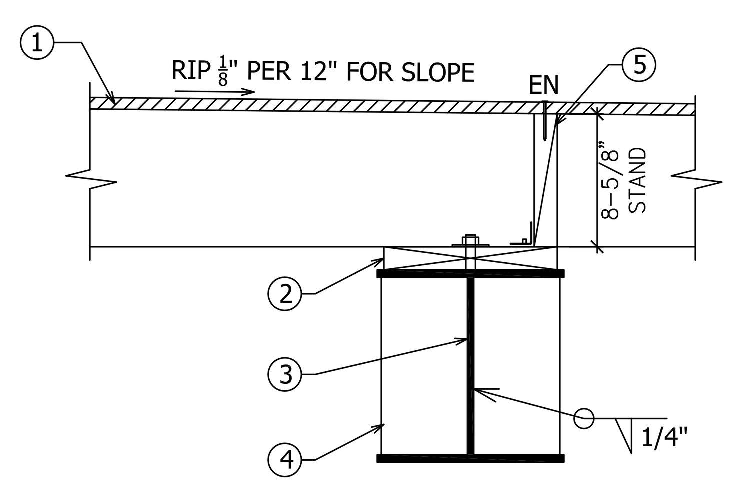

75 DECK CONNECTION DETAIL

1. EXISTING FLOOR SHEATHING AND CANTILEVERED FLOOR JOISTS TO REMAIN.
2. FULL DEPTH BLOCKING BETWEEN JOIST OVER WALL WITH EDGE NAILING FROM FLOOR SHEATHING.
3. PROVIDE 'A35' CLIPS OR 'LTP4' CLIPS FROM BLOCKING TO TOP PLATE SPACED AT 8" O.C.
4. SHEAR PANEL PER PLAN WHERE OCCURS.
5. DECK JOISTS PER PLAN BEARING A MINIMUM OF 3.5" ON TOP PLATE NAILED TO FLOOR JOISTS WITH (5)16d FACE NAILS

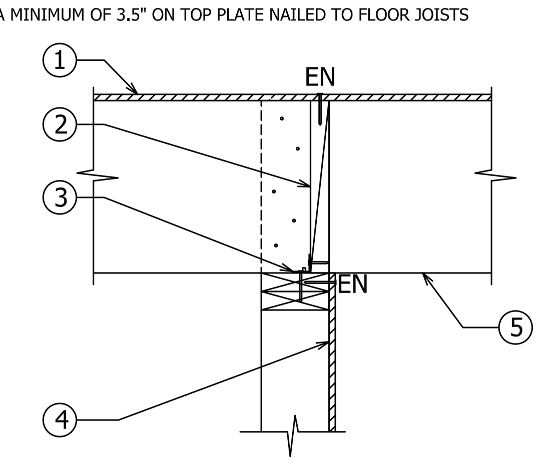

71 BEAM TO WALL DETAIL

1. EXISTING FLOOR JOISTS AND FLOOR SHEATHING TO REMAIN. HANG FLOOR JOISTS FROM BEAM WITH 'LUS210' HANGERS.
2. FLUSH BEAM PER PLAN.
3. NEW DECK JOISTS AND SHEATHING PER PLAN. HANG JOISTS FROM BEAM WITH 'IUS1.81/10' HANGERS.

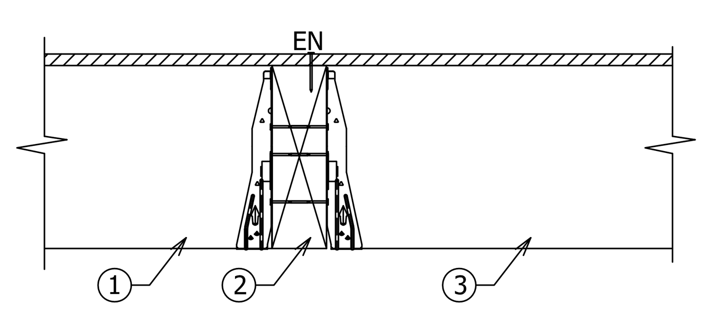

67 BEAM CONNECTION DETAIL

1. EXISTING FLOOR SHEATHING AND FLOOR JOISTS TO REMAIN.
2. FULL DEPTH JOIST OR BLOCKING OVER WALL WITH EDGE NAILING FROM FLOOR SHEATHING.
3. PROVIDE 'A35' CLIPS OR 'LTP4' CLIPS FROM JOIST TO TOP PLATE SPACED AT 8" O.C.
4. SHEAR PANEL PER PLAN WHERE OCCURS.

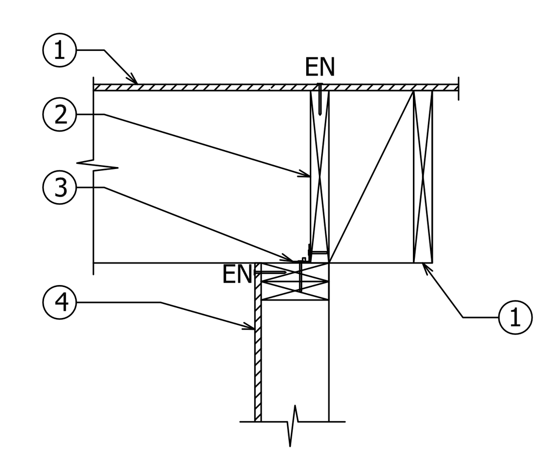

63 SHEAR TRANSFER DETAIL

THESE PLANS ARE NOT TO BE USED FOR CONSTRUCTION UNLESS THEY HAVE BEEN STAMPED AS APPROVED BY THE BUILDING DEPARTMENT AND THERE IS A WET SIGNATURE ACROSS ENGINEERS STAMP. THESE PLANS ARE NOT TO BE REPRODUCED WITHOUT PERMISSION BY ARMSTRONG ENGINEERING & DRAFTING INC.

no.	REVISION	DATE

ARMSTRONG ENGINEERING & DRAFTING, INC.
33504 Magnetite Street
Menifee, CA. 92584
(714)225-7056
Scott@ArmstrongEngineering.net

STRUCTURAL DETAILS

CIRKS RESIDENCE
3542 VENTURE DRIVE
HUNTINGTON BEACH, CA. 92649

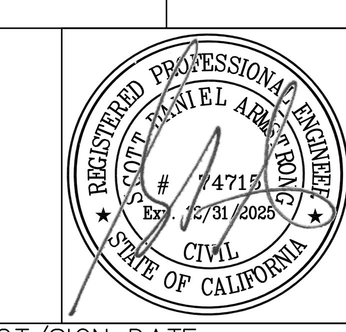

PLOT/SIGN DATE: 03/11/2024
SCALE: N.T.S.
JOB #: 2024-002
REVISION: #
SHEET #: S-7

1. NEW POST PER PLAN WITH EDGE NAILING FROM SHEAR PANEL WHERE SHEAR PANEL OCCURS.
2. EXISTING PRESSURE TREATED SILL TO REMAIN.
3. EXISTING SLAB AND FOOTING TO REMAIN.
4. NEW SQUARE PAD FOOTING PER PLAN BELOW EXISTING FOOTING.

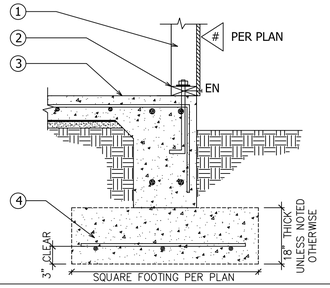

95 FOUNDATION CONNECTION

1. 3X4 PRESSURE TREATED SILL WITH 5/8" DIAMETER ALL THREAD WITH 8" EMBEDMENT INTO EXISTING SLAB WITH SIMPSON SET-XP EPOXY PER ESR-2508 SPACED PER PLAN. USE 3" SQUARE X 0.229" THICK PLATE WASHER AT EACH ANCHOR. INSTALL CUT WASHER ABOVE IF USING SLOTTED PLATE WASHERS.
2. EXISTING SLAB AND FOOTING TO REMAIN
3. 5/8" DIAMETER ALL THREAD WITH 8" EMBEDMENT INTO EXISTING FOOTING WITH SET-XP EPOXY PER ESR-2508.

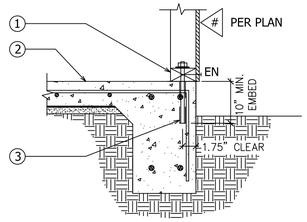

91 FOUNDATION CONNECTION

1. POST PER PLAN WITH 'CBSQ86-SDS2' COLUMN BASE. BEND A #3 BAR THROUGH BOTTOM STIRRUP OF POST BASE INTO FOOTING.
2. CONCRETE SLAB AND FOOTING PER PLAN.
3. CONCRETE PAD FOOTING PER PLAN CENTER BELOW POST ABOVE.

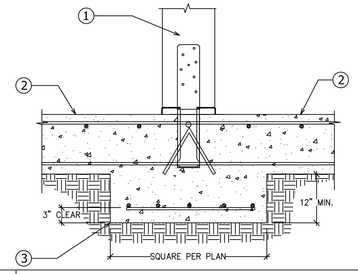

87 TRIMMER CONNECTION DETAIL

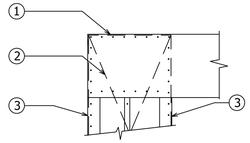

1. CONTINUOUS HEADER PER PLAN WITH EDGE NAILING FROM PLYWOOD.
2. LAP PLYWOOD FULL HEIGHT AND EDGE NAIL INTO BEAM.
3. 4X6 POST WITH EDGE NAILING FROM PLYWOOD. PROVIDE VERTICAL 'ST6624' FROM POST TO HEADER ON INSIDE FACE OF POST. INSTALL 'MST60' FROM POST TO POST/WALL BELOW PER PLAN.

84 SHEAR TRANSFER DETAIL

1. 3X8 NAILER WITH 5/8"ø NELSON STUDS WELDED TO TOP @ 24" O.C. OK TO COUNTER SINK WASHER AND NUT INTO NAILER. PROVIDE EDGE NAILING FROM FLOOR SHEATHING INTO NAILER.
2. FLOOR SHEATHING AND FLOOR JOISTS PER PLAN. HANG FLOOR JOISTS WITH 'LUS210' HANGERS TO NAILER.
3. NEW STEEL FLUSH BEAM PER PLAN. PROVIDE SOLID WOOD FILLER WITH 5/8"ø NELSON STUDS WELDED AT 24" O.C. MAXIMUM EACH SIDE OF BEAM TO HANG FLOOR JOISTS.
   INSTALL $\frac{3}{8}$" WEB STIFFENERS AT 48" O.C. EACH SIDE OF WEB AND AT PERPENDICULAR BEAMS WELDED TO WEB AND FLANGE WITH $\frac{1}{4}$" FILLET WELD ALL AROUND.
4. FLUSH BEAM PER PLAN WITH HANGER PER PLAN. PROVIDE A NELSON STUD EACH SIDE OF BEAM WITHIN 6" OF EACH SIDE OF HANGER.

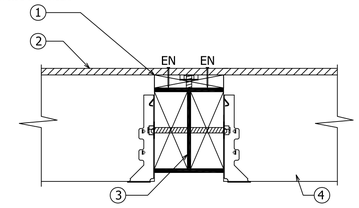

80 BEAM CONNECTION

1. NEW 4" CONCRETE SLAB WITH #3 BARS @ 18" O.C. EACH WAY AT MID-HEIGHT. INSTALL 8" WIDE X 8" THICK FOOTING ALONGSIDE EXISTING FOOTING WITH (1)#5 BAR AT MIDHEIGHT.
2. EXISTING SLAB AND FOOTING TO REMAIN.
3. DOWEL #3 BARS 6" INTO EXISTING FOOTING AT 18" O.C. WITH SIMPSON SET-XP EPOXY PER ESR-2508.

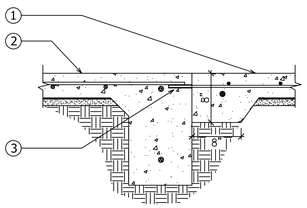

96 DOWELS AT FOUNDATION

2. 2X4 PRESSURE TREATED SILL WITH 5/8" DIAMETER ALL THREAD WITH 8" EMBEDMENT INTO EXISTING SLAB WITH SIMPSON SET-XP EPOXY PER ESR-2508 SPACED PER PLAN. USE 3" SQUARE X 0.229" THICK PLATE WASHER AT EACH ANCHOR. INSTALL CUT WASHER ABOVE IF USING SLOTTED PLATE WASHERS.
2. EXISTING SLAB AND FOOTING TO REMAIN
3. 5/8" DIAMETER ALL THREAD WITH 8" EMBEDMENT INTO EXISTING FOOTING WITH SET-XP EPOXY PER ESR-2508.

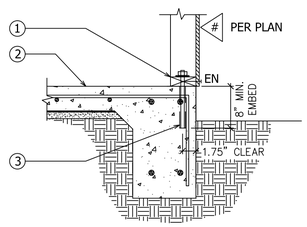

92 SHEAR TRANSFER DETAIL

1. NEW POST PER PLAN WITH 'CBSQ66' COLUMN BASE.
2. SAW CUT AND PATCH EXISTING SLAB WITH 18" LONG #4 BAR DOWELS @ 12" O.C. WITH 6" EMBEDMENT INTO EXISTING SLAB WITH SET-XP EPOXY PER ESR-2508 EACH SIDE.
3. NEW SQUARE PAD FOOTING PER PLAN BELOW EXISTING CONCRETE SLAB CENTERED BELOW POST ABOVE.
4. EXISTING SLAB TO REMAIN.

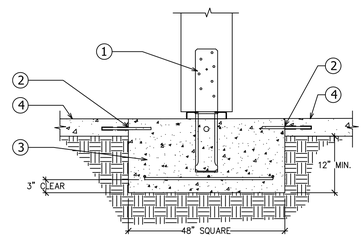

88 POST CONNECTION DETAIL

1. POST PER PLAN WITH 'CBSQ86-SDS2' COLUMN BASE. BEND A #3 BAR THROUGH BOTTOM STIRRUP OF POST BASE INTO FOOTING.
2. CONCRETE SLAB PER PLAN.
3. CONCRETE PAD FOOTING PER PLAN CENTER BELOW POST ABOVE.

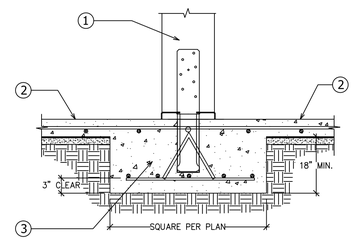

85 FOUNDATION CONNECTION

1. HOLDOWN PER PLAN ATTACHED TO POST PER PLAN.
2. CONCRETE SLAB AND FOOTING REINFORCEMENT PER PLAN.
3. PROVIDE SSTBXX STAB ANCHOR PER CHART BELOW. DEEPEN FOOTING AS REQUIRED TO OBTAIN 3" MINIMUM COVERAGE FROM DIRT AT BOTTOM. INSTALL PER ICC-ES ESR-2611.

HOLDOWN TYPE	CAPACITY	DIAMETER OF ANCHOR	STAB BOLT REQUIRED	MINIMUM DEPTH OF EMBED.
HDU2	3075#	5/8"ø	SSTB16	12-5/8"
HDU4	4565#	5/8"ø	SSTB24	20-5/8"
HDU5	5645#	5/8"ø	SSTB24	20-5/8"
HDU8	6970#	7/8"ø	SSTB28	24-7/8"
HDU14	14445#	1"ø	SB1X30	24"

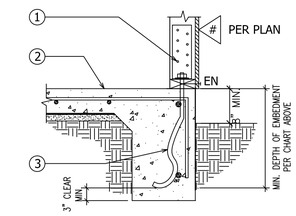

81 HOLDOWN CONNECTION DETAIL

1. EXISTING CONCRETE SLAB AND FOOTING TO REMAIN.
2. 4" CONCRETE SLAB WITH #3 BARS AT 18" O.C. EACH WAY AT MIDHEIGHT. INSTALL 2" OF SAND BELOW SLAB. OK TO INSTALL A 15mil VISQUEEN VAPOR BARRIER BELOW SAND IF DESIRED AT OUTDOOR PATIO AREA. INSTALL 8" WIDE X 8" DEEP FOOTING ALONGSIDE EXISTING WITH (1)#5 BAR AT MIDHEIGHT. DOWEL SLAB STEEL INTO EXISTING FOOTING WITH 6" MINIMUM EMBEDMENT WITH SIMPSON SET-XP EPOXY INSTALLED PER ESR-2508.

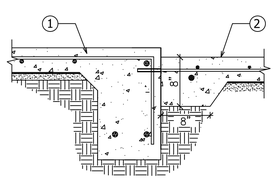

97 DOWELS AT FOUNDATION

1. EXISTING SLAB AND FOOTING TO REMAIN
2. NEW FOOTING PER PLAN. DOWEL 6" MINIMUM INTO EXISTING FOOTING WITH TOP AND BOTTOM BAR WITH SIMPSON SET-XP EPOXY PER ESR-2508.

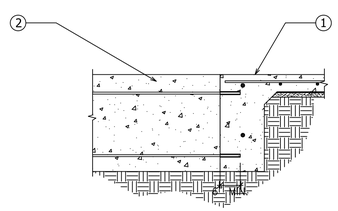

93 DOWELS AT FOUNDATION

1. PRESSURE TREATED SILL WITH NEW 5/8" DIAMETER ALL THREAD WITH 8" EMBEDMENT INTO EXISTING SLAB WITH SIMPSON SET-XP EPOXY PER ESR-2508 SPACED AT 32" O.C. MAX. USE 3" SQUARE X 0.229" THICK PLATE WASHER AT EACH ANCHOR. INSTALL CUT WASHER ABOVE IF USING SLOTTED PLATE WASHERS.
2. EXISTING SLAB AND FOOTING TO REMAIN
3. 5/8" DIAMETER ALL THREAD WITH 8" EMBEDMENT INTO EXISTING FOOTING WITH SIMPSON SET-XP EPOXY PER ESR-2508 SPACED AT 32" O.C. MAX.

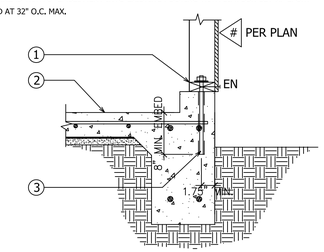

89 SHEAR TRANSFER DETAIL

1. EXISTING SLAB TO BE SAW CUT FOR NEW FOOTING AND EXISTING FOOTING TO BE REMOVED.
2. NEW 15" WIDE X 18" DEEP CONCRETE FOOTING WITH (2)#5 BARS AT 3" FROM TOP AND BOTTOM.
3. #4 DOWELS AT 18" O.C WITH 6" EMBEDMENT INTO MIDDLE OF EXISTING SLAB WITH SIMPSON SET-XP EPOXY PER ESR-2508.

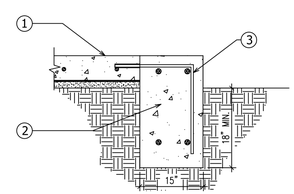

86 FOUNDATION CONNECTION

1. NEW HOLDOWN ATTACHED TO POST PER PLAN.
2. EXISTING SLAB AND FOOTING TO REMAIN.
3. 5/8" DIAMETER ALL THREAD WITH 12" MINIMUM EMBEDMENT INTO EXISTING FOOTING WITH SIMPSON SET-XP EPOXY INSTALLED PER ESR-2508.

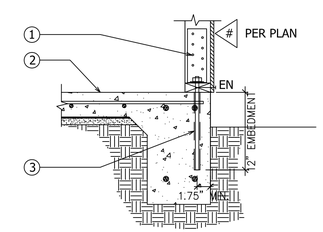

82 HOLDOWN CONNECTION DETAIL

1. PLYWOOD SHEAR PANEL PER PLAN OVER STUDS @ 16" O.C.
2. PROVIDE 3X PRESSURE TREATED SILL WITH 5/8"ø ALL THREAD ANCHOR BOLTS SPACED PER PLAN WITH 3" SQUARE X 0.229" THICK BEARING PLATE WASHER AT EACH ANCHOR. INSTALL CUT WASHER ABOVE IF USING SLOTTED PLATE WASHERS. DOWEL ANCHORS INTO EXISTING SLAB WITH 10" MINIMUM EMBEDMENT WITH SIMPSON SET-XP EPOXY PER ESR-2508.
3. EXISTING CONCRETE SLAB AND FOOTING TO REMAIN.
4. 4" CONCRETE SLAB WITH #3 BARS AT 18" O.C. EACH WAY AT MIDHEIGHT. INSTALL 2" OF SAND BELOW SLAB. OK TO INSTALL A 15mil VISQUEEN VAPOR BARRIER BELOW SAND IF DESIRED AT OUTDOOR PATIO AREA. INSTALL 8" WIDE X 8" DEEP FOOTING ALONGSIDE EXISTING WITH (1)#5 BAR AT MIDHEIGHT. DOWEL SLAB STEEL INTO EXISTING FOOTING WITH 6" MINIMUM EMBEDMENT WITH SIMPSON SET-XP EPOXY INSTALLED PER ESR-2508.

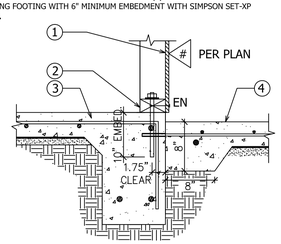

98 SHEAR TRANSFER DETAIL

1. NEW POST PER PLAN WITH EDGE NAILING FROM SHEAR PANEL.
2. EXISTING PRESSURE TREATED SILL TO REMAIN.
3. EXISTING SLAB AND FOOTING TO REMAIN.
4. NEW SQUARE PAD FOOTING PER PLAN BELOW EXISTING FOOTING.

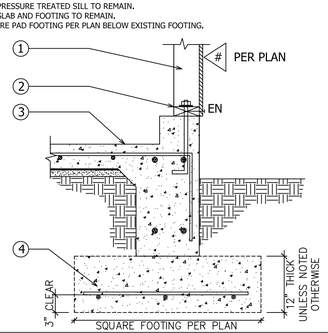

94 FOOTING CONNECTION DETAIL

1. NEW SHEAR PANEL PER PLAN WHERE OCCURS.
2. NEW PLYWOOD EDGE NAILING PER PLAN.
3. PRESSURE TREATED SILL WITH 5/8" DIAMETER ALL THREAD WITH 8" EMBEDMENT INTO EXISTING SLAB WITH SIMPSON SET-XP EPOXY PER ESR-2508 SPACED PER PLAN. USE 3" SQUARE X 0.229" THICK PLATE WASHER AT EACH ANCHOR. INSTALL CUT WASHER ABOVE IF USING SLOTTED PLATE WASHERS.
4. EXISTING SLAB AND FOOTING TO REMAIN
5. PROVIDE 5/8" DIAMETER ALL THREAD WITH 8" EMBEDMENT INTO EXISTING FOOTING WITH SIMPSON SET-XP EPOXY PER ESR-2508.

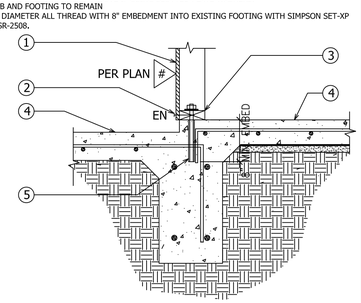

90 SHEAR TRANSFER DETAIL

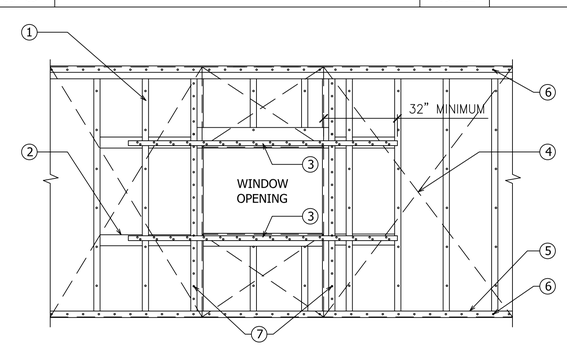

1. 2X STUDS @ 16" O.C. PROVIDE 3X STUDS AT PANEL EDGES WHERE REQUIRED PER PLAN(SHEAR WALL TYPES 12, 13, 14).
2. 4X4 BLOCKING FOR 'CMSTC16' STRAP NAILING.
3. CONTINUOUS SIMPSON 'CMSTC16' STRAP w/10d NAILS @ 4" O.C. INSTALLED OVER SHEAR PANEL.
4. PLYWOOD SHEAR PER PLAN. APPLY EACH SIDE OF WINDOW AND ALSO ABOVE AND BELOW WINDOW OPENING.
5. SILL PLATE BOLTING PER PLAN INTO CONCRETE SLAB BELOW.
6. PROVIDE EDGE NAILING PER PLAN INTO TOP AND BOTTOM PLATE.
7. PROVIDE PLYWOOD EDGE NAILING PER PLAN ALONG LENGTH OF KINGSTUD EACH SIDE OF OPENING.

83 SHEAR TRANSFER AROUND WINDOW OPENING

THESE PLANS ARE NOT TO BE USED FOR CONSTRUCTION UNLESS THEY HAVE BEEN STAMPED AS APPROVED BY THE BUILDING DEPARTMENT AND THERE IS A WET SIGNATURE ACROSS ENGINEERS STAMP. THESE PLANS ARE NOT TO BE REPRODUCED WITHOUT PERMISSION BY ARMSTRONG ENGINEERING & DRAFTING INC.

no.	REVISION	DATE

ARMSTRONG ENGINEERING & DRAFTING, INC.
33504 Magnolia Street
Menifee, CA. 93584
(714)225-7056
Scott@ArmstrongEngineering.net

STRUCTURAL DETAILS

CIRKS RESIDENCE
3542 VENTURE DRIVE
HUNTINGTON BEACH, CA. 92649

REGISTERED PROFESSIONAL ENGINEER SCOTT DANIEL ARMSTRONG # 47151 EXP. 12/31/2025 CIVIL STATE OF CALIFORNIA

PLOT/SIGN DATE: 03/11/2024
SCALE: N.T.S.
JOB #: 2024-002
REVISION: #
SHEET #: S-8

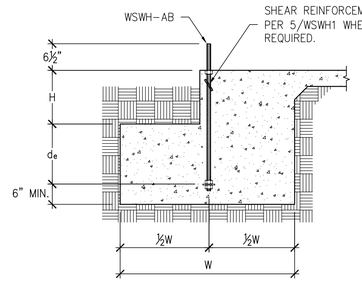

SLAB ON GRADE FOUNDATION

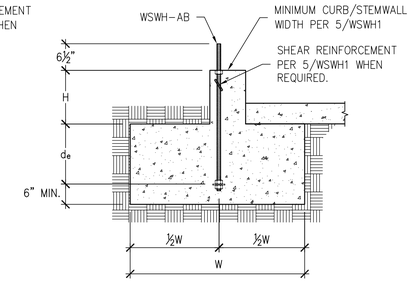

CURB OR STEMWALL FOUNDATION

NOTES :
1. SEE 2/WSWH1 FOR DIMENSIONS AND ADDITIONAL NOTES.
2. SEE 5/WSWH1 FOR SHEAR REINFORCEMENT WHEN REQUIRED.
3. MAXIMUM H = $l_e - d_e$. SEE 3/WSWH1 AND 4/WSWH1 FOR l_e.

DESIGNER IS PERMITTED TO MODIFY DETAILS FOR SPECIFIC CONDITIONS.

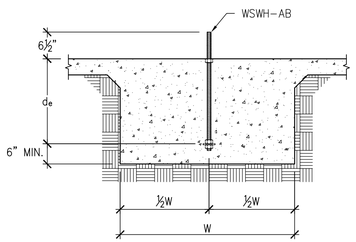

INTERIOR FOUNDATION

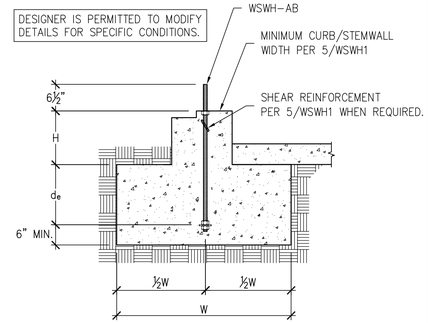

BRICK LEDGE FOUNDATION

STRONG-WALL® WSWH ANCHORAGE – TYPICAL SECTIONS | 1

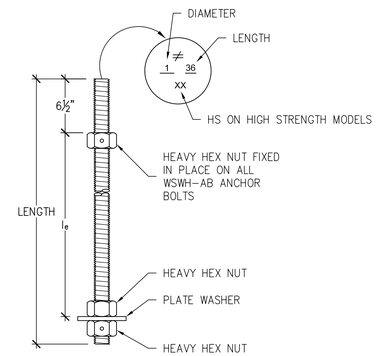

WSWH PANEL MODEL	MODEL NO.	DIAMETER	LENGTH	l_e
WSWH12, WSWH18 AND WSWH24	WSWH-AB1x24	1"	24"	15½"
	WSWH-AB1x24HS	1"	24"	15½"
	WSWH-AB1x30	1"	30"	21½"
	WSWH-AB1x30HS	1"	30"	21½"
	WSWH-AB1x36	1"	36"	27½"
	WSWH-AB1x36HS	1"	36"	27½"

WSWH ANCHOR BOLTS | 3

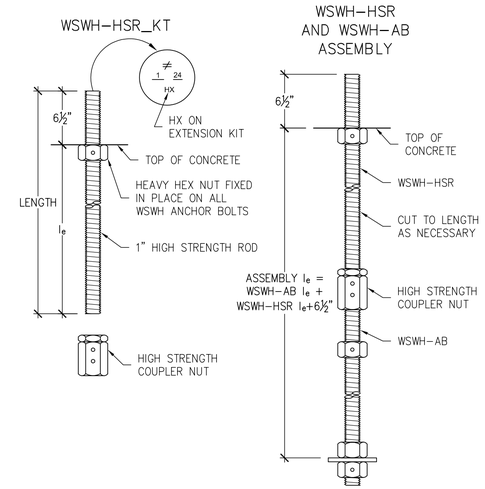

WSWH PANEL MODEL	MODEL NO.	DIAMETER	LENGTH	l_e
WSWH12, WSWH18 AND WSWH24	WSWH-HSR1x24KT	1"	24"	17½"
	WSWH-HSR1x36KT	1"	36"	29½"

WSWH ANCHOR BOLT EXTENSION | 4

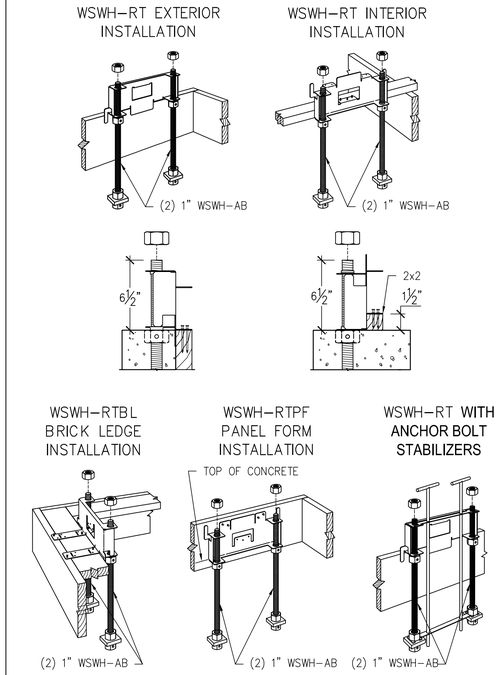

WSWH ANCHOR BOLT TEMPLATES | 6

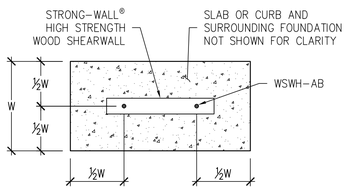

FOUNDATION PLAN VIEW

NOTES :
1. ANCHORAGE DESIGNS CONFORM TO ACI 318-11 APPENDIX D, ACI 318-14 CHAPTER 17 AND ACI 318-19 CHAPTER 17 WITH NO SUPPLEMENTARY REINFORCEMENT FOR CRACKED OR UNCRACKED CONCRETE AS NOTED.
2. ANCHOR STRENGTH INDICATES REQUIRED GRADE OF WSWH-AB ANCHOR BOLT. STANDARD (ASTM F1554 GRADE 36) OR HIGH STRENGTH (HS) (ASTM A193 GRADE B7).
3. SEISMIC INDICATES SEISMIC DESIGN CATEGORY C–F. DETACHED 1 AND 2 FAMILY DWELLINGS IN SDC C MAY USE WIND ANCHORAGE SOLUTIONS. SEISMIC ANCHORAGE DESIGNS CONFORM TO ACI 318-11 SECTION D.3.3.4.3, ACI 318-14 SECTION 17.2.3.4.3 AND ACI 318-19 SECTION 17.10.5.3.
4. WIND INCLUDES SEISMIC DESIGN CATEGORY A AND B AND DETACHED 1 AND 2 FAMILY DWELLINGS IN SDC C.
5. FOUNDATION DIMENSIONS ARE FOR ANCHORAGE ONLY. FOUNDATION DESIGN (SIZE AND REINFORCEMENT) BY OTHERS. THE DESIGNER MAY SPECIFY ALTERNATE EMBEDMENT, FOOTING SIZE OR ANCHOR BOLT.
6. REFER TO 1/WSWH1 FOR d_e.

WSWH ANCHORAGE SOLUTIONS FOR 2500 PSI CONCRETE

DESIGN CRITERIA	CONCRETE CONDITION	ANCHOR STRENGTH	WSWH-AB1 ANCHOR BOLT		
			ASD ALLOWABLE UPLIFT (lbs)	W (in)	d_e (in)
SEISMIC	CRACKED	STANDARD	16,000	33	11
			17,100	35	12
		HIGH STRENGTH	34,100	52	18
			36,800	55	19
	UNCRACKED	STANDARD	15,700	28	10
			17,100	30	10
		HIGH STRENGTH	33,500	45	15
			36,800	48	16
WIND	CRACKED	STANDARD	6,200	16	6
			11,400	24	8
			17,100	32	11
		HIGH STRENGTH	21,100	36	12
			27,300	42	14
			34,100	48	16
			36,800	51	17
	UNCRACKED	STANDARD	6,400	14	6
			12,500	22	8
			17,100	28	10
		HIGH STRENGTH	22,900	33	11
			26,400	36	12
			34,200	42	14
			36,800	44	15

WSWH ANCHORAGE SOLUTIONS FOR 3000 PSI CONCRETE

DESIGN CRITERIA	CONCRETE CONDITION	ANCHOR STRENGTH	WSWH-AB1 ANCHOR BOLT		
			ASD ALLOWABLE UPLIFT (lbs)	W (in)	d_e (in)
SEISMIC	CRACKED	STANDARD	16,000	31	11
			17,100	33	11
		HIGH STRENGTH	33,900	49	17
			36,800	52	18
	UNCRACKED	STANDARD	16,300	27	9
			17,100	28	10
		HIGH STRENGTH	34,000	43	15
			36,800	46	16
WIND	CRACKED	STANDARD	5,600	14	6
			10,200	21	7
			17,100	30	10
		HIGH STRENGTH	20,000	33	11
			26,500	39	13
			33,600	45	15
			36,800	48	16
	UNCRACKED	STANDARD	6,200	13	6
			12,800	21	7
			17,100	26	9
		HIGH STRENGTH	21,800	30	10
			28,900	36	12
			33,100	39	13
			36,800	42	14

WSWH ANCHORAGE SOLUTIONS FOR 4500 PSI CONCRETE

DESIGN CRITERIA	CONCRETE CONDITION	ANCHOR STRENGTH	WSWH-AB1 ANCHOR BOLT		
			ASD ALLOWABLE UPLIFT (lbs)	W (in)	d_e (in)
SEISMIC	CRACKED	STANDARD	16,000	27	9
			17,100	29	10
		HIGH STRENGTH	34,700	44	15
			36,800	46	16
	UNCRACKED	STANDARD	15,700	23	8
			17,100	25	9
		HIGH STRENGTH	33,900	38	13
			36,800	40	14
WIND	CRACKED	STANDARD	6,800	14	6
			11,600	20	7
			17,100	26	9
		HIGH STRENGTH	21,400	30	10
			28,400	36	12
			32,400	39	13
			36,800	43	15
	UNCRACKED	STANDARD	6,800	12	6
			12,400	18	6
			17,100	23	8
		HIGH STRENGTH	22,800	27	9
			26,700	30	10
			30,700	33	11
			36,800	37	13

STRONG-WALL® HIGH STRENGTH WOOD SHEARWALL TENSION ANCHORAGE SCHEDULE 2,500, 3,000 AND 4,500 PSI | 2

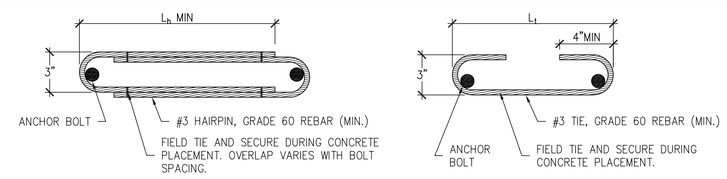

HAIRPIN SHEAR REINFORCEMENT

TIE SHEAR REINFORCEMENT

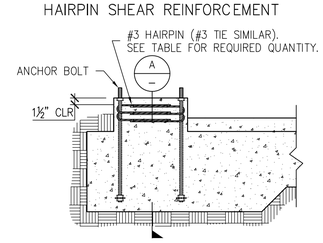

HAIRPIN INSTALLATION

(GARAGE CURB SHOWN. OTHER FOOTING TYPES SIMILAR.)

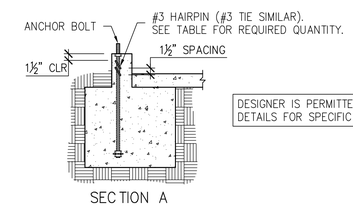

SECTION A

DESIGNER IS PERMITTED TO MODIFY DETAILS FOR SPECIFIC CONDITIONS.

STRONG-WALL® HIGH STRENGTH WOOD SHEARWALL SHEAR ANCHORAGE

MODEL	SEISMIC[3]			WIND[4]		
	L_t OR L_h (in.)	SHEAR REINFORCEMENT	MIN. CURB/STEMWALL WIDTH (in.)	SHEAR REINFORCEMENT	MIN. CURB/STEMWALL WIDTH (in.)	ASD ALLOWABLE SHEAR LOAD, V (lb.)
						UNCRACKED / CRACKED
WSWH12	10¼	(1) #3 TIE	6	SEE NOTE 7	6	1,080 / 770
WSWH18	15	(2) #3 HAIRPINS[5,6]	6	(1) #3 HAIRPIN	6	HAIRPIN REINF. ACHIEVES MAX. ALLOW SHEAR LOAD OF THE WSWH
WSWH24	19	(2) #3 HAIRPINS[5]	6	(2) #3 HAIRPINS[5]	6	

NOTES :
1. SHEAR ANCHORAGE DESIGNS CONFORM TO ACI 318-19, ACI 318-11 AND ACI 318-14 AND ASSUME MINIMUM 2,500 PSI CONCRETE.
2. SHEAR REINFORCEMENT IS NOT REQUIRED FOR INTERIOR FOUNDATION APPLICATIONS (PANEL INSTALLED AWAY FROM EDGE OF CONCRETE), OR BRACED WALL PANEL APPLICATIONS.
3. SEISMIC INDICATES SEISMIC DESIGN CATEGORY C THROUGH F. DETACHED 1 AND 2 FAMILY DWELLINGS IN SDC C MAY USE WIND ANCHORAGE SOLUTIONS. SEISMIC SHEAR REINFORCEMENT DESIGNS CONFORM TO ACI 318-19, SECTION 17.10.6.3, ACI 318-14, SECTION 17.2.3.5.3
4. WIND INCLUDES SEISMIC DESIGN CATEGORY A AND B.
5. ADDITIONAL TIES MAY BE REQUIRED AT GARAGE CURB OR STEMWALL INSTALLATIONS BELOW ANCHOR REINFORCEMENT PER DESIGNER.
6. USE (1) #3 HAIRPIN FOR WSWH18 WHEN STANDARD STRENGTH ANCHOR IS USED.
7. USE (1) #3 TIE FOR WSWH12 WHEN PANEL DESIGN SHEAR FORCE EXCEEDS TABULATED ANCHORAGE ALLOWABLE SHEAR LOAD.
8. #4 GRADE 40 SHEAR REINFORCEMENT MAY BE SUBSTITUTED FOR WSWH SHEAR ANCHORAGE SOLUTIONS.
9. CONCRETE EDGE DISTANCE FOR ANCHORS MUST COMPLY WITH ACI 318-19 SECTION 17.9.2, ACI 318-14 SECTION 17.7.2 AND ACI 318-11 SECTION D.8.2.
10. THE DESIGNER MAY SPECIFY ALTERNATE SHEAR ANCHORAGE.

STRONG-WALL® WSWH SHEAR ANCHORAGE SCHEDULE AND DETAILS | 5

NO.	DATE	REVISIONS
0	02-26-2021	FIRST RELEASE - 2018 IBC
1	03-16-2021	2021 IBC REVISIONS

SIMPSON Strong-Tie, Co. Inc.
• 5956 W. Las Positas Blvd. Pleasanton, CA 94588
• Tel: (800) 999-5099
• Website: www.strongtie.com

SIMPSON Strong-Tie THERE IS NO EQUAL

STRONG-WALL® WSWH
ANCHORAGE DETAILS
ENGINEERED DESIGNS

SIMPSON Strong-Tie THERE IS NO EQUAL

NAME
DATE 03-16-2021
SCALE N.T.S.
CHECKED
SHEET WSWH1
OF SHEETS
JOB NO.

STRONG-WALL® HIGH STRENGTH WOOD SHEARWALL MODELS

MODEL NO.	W (in.)	H (in.)	ANCHOR BOLTS		TOTAL WALL WEIGHT (lb.)
			QUANTITY	DIA. (in.)	
WSWH12x7	12	84	2	1	105
WSWH18x7	18	84	2	1	155
WSWH12x8	12	96	2	1	120
WSWH18x8	18	96	2	1	175
WSWH24x8	24	96	2	1	225
WSWH12x9	12	108	2	1	130
WSWH18x9	18	108	2	1	195
WSWH24x9	24	108	2	1	250
WSWH12x10	12	120	2	1	145
WSWH18x10	18	120	2	1	210
WSWH24x10	24	120	2	1	275
WSWH12x12	12	144	2	1	165
WSWH18x12	18	144	2	1	245
WSWH24x12	24	144	2	1	325
WSWH18x14	18	168	2	1	285
WSWH24x14	24	168	2	1	370
WSWH24x16	24	192	2	1	420
WSWH18x20	18	240	2	1	390
WSWH24x20	24	240	2	1	520

NOTES :
1. FOR HEIGHTS NOT LISTED, ORDER THE NEXT TALLEST PANEL AND TRIM TO FIT. MINIMUM TRIMMED HEIGHT FOR ALL PANELS IS 74½".
2. ALL PANELS COME WITH PRE-ATTACHED HOLDOWNS, TWO HEAVY HEX NUTS, TWO HEAVY BEARING PLATES, ONE WSWH-TP TOP CONNECTION PLATE WITH REQUIRED FASTENERS AND INSTALLATION INSTRUCTIONS.
3. ALL PANELS ARE 3½" THICK.

STRONG-WALL® WSWH MODELS 1

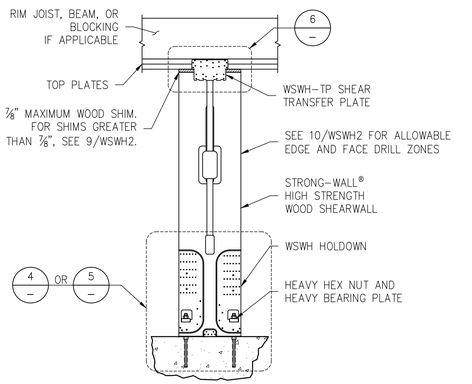

DESIGNER IS PERMITTED TO MODIFY DETAILS FOR SPECIFIC CONDITIONS.

ENSURE CONCRETE IS LEVEL AND SMOOTH BENEATH PANEL. GRIND OR FILL AS NECESSARY.

SINGLE STORY WSWH ON CONCRETE 2

STANDARD INSTALLATION BASE CONNECTION 4

DESIGNER IS PERMITTED TO MODIFY DETAILS FOR SPECIFIC CONDITIONS.

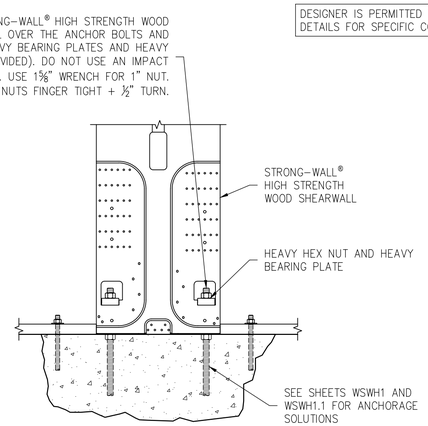

WOOD FLOOR SYSTEM BASE CONNECTION 5

DESIGNER IS PERMITTED TO MODIFY DETAILS FOR SPECIFIC CONDITIONS.

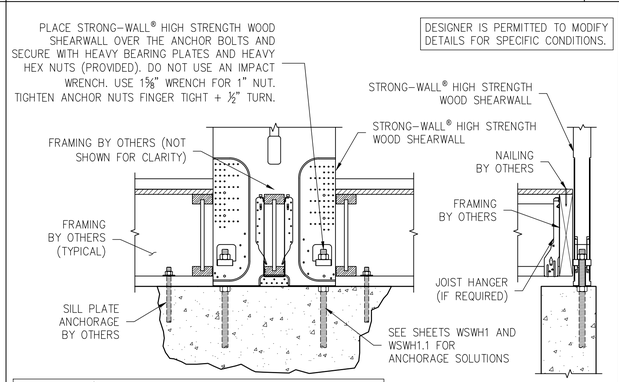

STRONG-WALL® HIGH STRENGTH WOOD SHEARWALL HEIGHT TO INCLUDE THE DEPTH OF THE FLOOR SYSTEM AND SHALL BE INSTALLED DIRECTLY ON THE FOUNDATION. SPECIFY PANEL HEIGHT FROM TOP OF FOUNDATION TO UNDERSIDE OF TOP PLATES OR BEAM.

TOP CONNECTION 6

WSWH-TP CONNECTION		
MODEL NO.	FASTENER QUANTITY	
	SWS16150	SDS25600
WSWH-TP12	14	2
WSWH-TP18	26	4
WSWH-TP24	46	8

DESIGNER IS PERMITTED TO MODIFY DETAILS FOR SPECIFIC CONDITIONS.

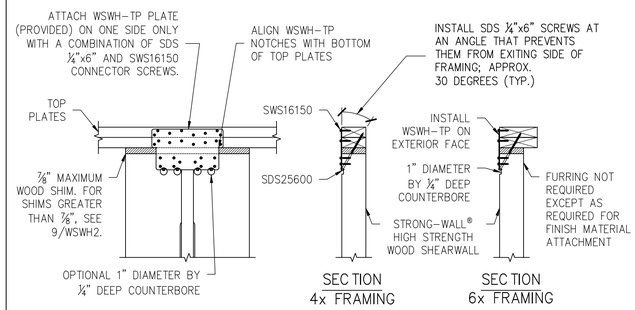

BACK-TO-BACK TOP CONNECTION 7

WSWH-TP CONNECTION		
MODEL NO.	FASTENER QUANTITY	
	SWS16150	SDS25600
WSWH-TP12	28	4
WSWH-TP18	52	8
WSWH-TP24	92	16

DESIGNER IS PERMITTED TO MODIFY DETAILS FOR SPECIFIC CONDITIONS.

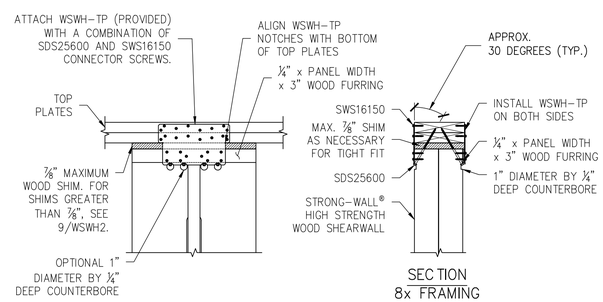

BACK-TO-BACK TOP CONNECTION 7

TOP OF WALL HEIGHT ADJUSTMENTS 9

DESIGNER IS PERMITTED TO MODIFY DETAILS FOR SPECIFIC CONDITIONS.

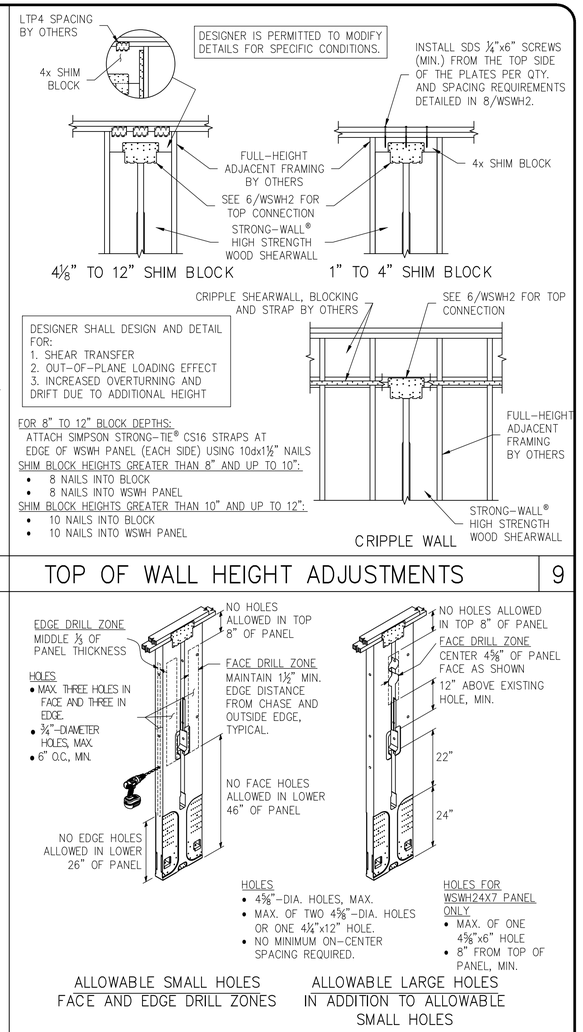

DESIGNER SHALL DESIGN AND DETAIL FOR:
1. SHEAR TRANSFER
2. OUT-OF-PLANE LOADING EFFECT
3. INCREASED OVERTURNING AND DRIFT DUE TO ADDITIONAL HEIGHT

FOR 8" TO 12" BLOCK DEPTHS:
ATTACH SIMPSON STRONG-TIE® CS16 STRAPS AT EDGE OF WSWH PANEL (EACH SIDE) USING 10dx1½" NAILS

SHIM BLOCK HEIGHTS GREATER THAN 8" AND UP TO 10":
- 8 NAILS INTO BLOCK
- 8 NAILS INTO WSWH PANEL

SHIM BLOCK HEIGHTS GREATER THAN 10" AND UP TO 12":
- 10 NAILS INTO BLOCK
- 10 NAILS INTO WSWH PANEL

TRIM ZONE AND ALLOWABLE HOLES 10

ALTERNATE WSWH GARAGE FRONT OPTIONS 3

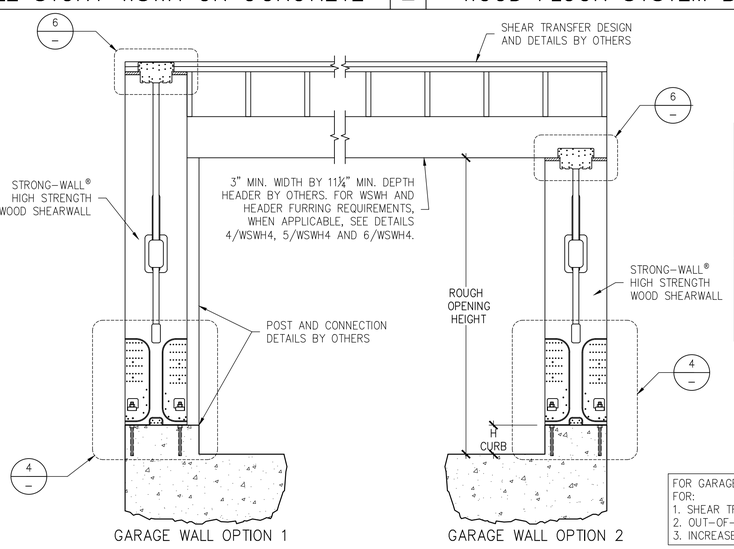

DESIGNER IS PERMITTED TO MODIFY DETAILS FOR SPECIFIC CONDITIONS.

WHEN WSWH-PS STRAPS OMITTED, ALLOWABLE SHEAR VALUES FOR STANDARD PANEL APPLY.

GARAGE HEADER ROUGH OPENING HEIGHT

MODEL NO.	TRIMMED PANEL HEIGHT	H CURB	ROUGH OPENING HEIGHT
WSWH12x7 WSWH18x7 WSWH24x7	78"	5½"	6'-11½"
		6"	7'-0"
WSWH12x8 WSWH18x8 WSWH24x8	85½"	0"	7'-1½"
	93¾"	5½"	8'-2¾"
		6"	8'-3¾"

NOTES :
1. IF REQUIRED ROUGH OPENING HEIGHT EXCEEDS TABLE VALUE, SPECIFY NEXT TALLER PANEL AND TRIM AS NECESSARY. THE STRONG-WALL® HIGH STRENGTH WOOD SHEARWALL MAY BE TRIMMED TO A MINIMUM HEIGHT OF 74½".
2. FURRING DOWN GARAGE HEADER MAY BE REQUIRED FOR CORRECT ROUGH OPENING HEIGHT.

FOR GARAGE WALL OPTION 2, DESIGNER SHALL DESIGN AND DETAIL FOR:
1. SHEAR TRANSFER
2. OUT-OF-PLANE LOADING EFFECT
3. INCREASED OVERTURNING AND DRIFT DUE TO ADDITIONAL HEIGHT

RAKE WALL 8

QTY. OF SDS¼"x6" SCREWS REQ'D.	
WSWH12	4
WSWH18	8
WSWH24	16

EDGE DISTANCE FOR SCREWS		
SLOPE	A (in.)	B (in.)
0:12-4:12	2	3
5:12-8:12	1½	4½
9:12-12:12	1½	5½

NOTES :
1. MAINTAIN END DISTANCES TO PREVENT SCREWS FROM PENETRATING THROUGH THE OUTER EDGES.
2. INSTALL SCREWS PERPENDICULAR TO THE TOP PLATE.
3. EDGE DISTANCES ASSUME DOUBLE TOP PLATE.

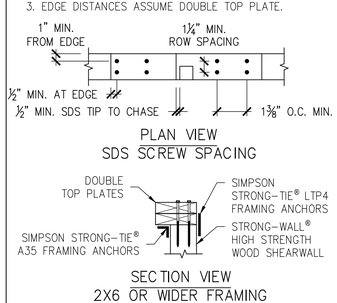

DESIGNER IS PERMITTED TO MODIFY DETAILS FOR SPECIFIC CONDITIONS.

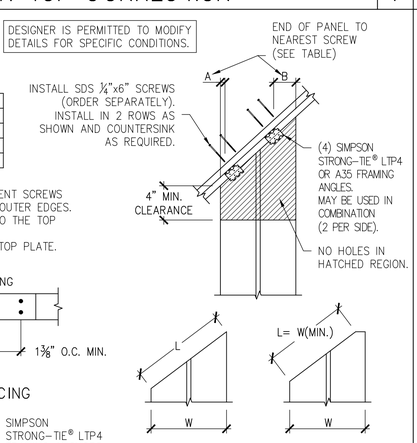

INSTALLATION NOTES :
1. ACTUAL CUT LENGTH (L) MUST BE GREATER THAN OR EQUAL TO PANEL WIDTH (W).
2. THIS DETAIL APPLICABLE FOR SLOPES UP TO 12:12.
3. PANELS TALLER THAN 12' MUST BE DESIGNED FOR THE APPLICATION.

NOTES 11

1. STRONG-WALL® HIGH STRENGTH WOOD SHEARWALL IS MANUFACTURED AND TRADEMARKED BY "SIMPSON STRONG-TIE COMPANY INC." HOME OFFICE: 5956 W. LAS POSITAS BLVD., PLEASANTON, CA 94588 TEL: (800) 999-5099, FAX: (925) 847-1597. "SIMPSON STRONG-TIE COMPANY INC." IS AN ISO 9001-2008 REGISTERED COMPANY.
2. USE OF THIS PRODUCT IS SUBJECT TO THE APPROVAL OF THE LOCAL BUILDING DEPARTMENT.
3. THIS PRODUCT IS PART OF THE OVERALL LATERAL FORCE RESISTING SYSTEM OF THE STRUCTURE. DESIGN OF THE BUILDING'S LATERAL FORCE RESISTING SYSTEM, INCLUDING THE LOAD PATH TO TRANSFER LATERAL FORCES FROM THE STRUCTURE TO THE GROUND, IS THE RESPONSIBILITY OF THE DESIGNER.
4. ENGINEER OF RECORD IS PERMITTED TO MODIFY DETAILS FOR SPECIFIC CONDITIONS.
5. THE CONTRACTOR SHALL VERIFY ALL DIMENSIONS, CONDITIONS, ELEVATIONS, ETC. PRIOR TO INSTALLATION OF ANY COMPONENTS FOR THE STRONG-WALL SB SYSTEM. IF ANY DISCREPANCIES ARE FOUND, THEY SHALL BE BROUGHT TO THE ATTENTION OF THE DESIGNER FOR CLARIFICATION PRIOR TO CONSTRUCTION.
6. INSTALLATION OF PRODUCT SHALL BE DONE IN CONFORMANCE TO THESE DRAWINGS. THE PERFORMANCE OF MODIFIED PRODUCTS OR ALTERED INSTALLATION PROCEDURES ARE THE SOLE RESPONSIBILITY OF THE DESIGNER.
7. SIMPSON STRONG-TIE COMPANY INC. RESERVES THE RIGHT TO CHANGE SPECIFICATIONS, DESIGNS, AND MODELS WITHOUT NOTICE OR LIABILITY FOR SUCH CHANGES.
8. ALL HARDWARE CALLED OUT IS SIMPSON STRONG-TIE.
9. SEE ICC-ES ESR-2652 OR CITY OF LOS ANGELES RR25730 AS APPLICABLE FOR ADDITIONAL INFORMATION.

NO.	DATE	REVISIONS
0	11-20-2020	FIRST RELEASE - 2018 IBC
1	03-16-2021	2021 IBC REVISIONS

SIMPSON Strong-Tie, Co. Inc.
• 5956 W. Las Positas Blvd. Pleasanton, CA 94588
• Tel: (800) 999-5099
• Website: www.strongtie.com

SIMPSON Strong-Tie THERE IS NO EQUAL

STRONG-WALL® WSWH
FRAMING DETAILS
ENGINEERED DESIGNS

SIMPSON Strong-Tie THERE IS NO EQUAL

NAME
DATE 03-16-2021
SCALE N.T.S.
CHECKED
SHEET WSWH2
OF SHEETS
JOB NO.

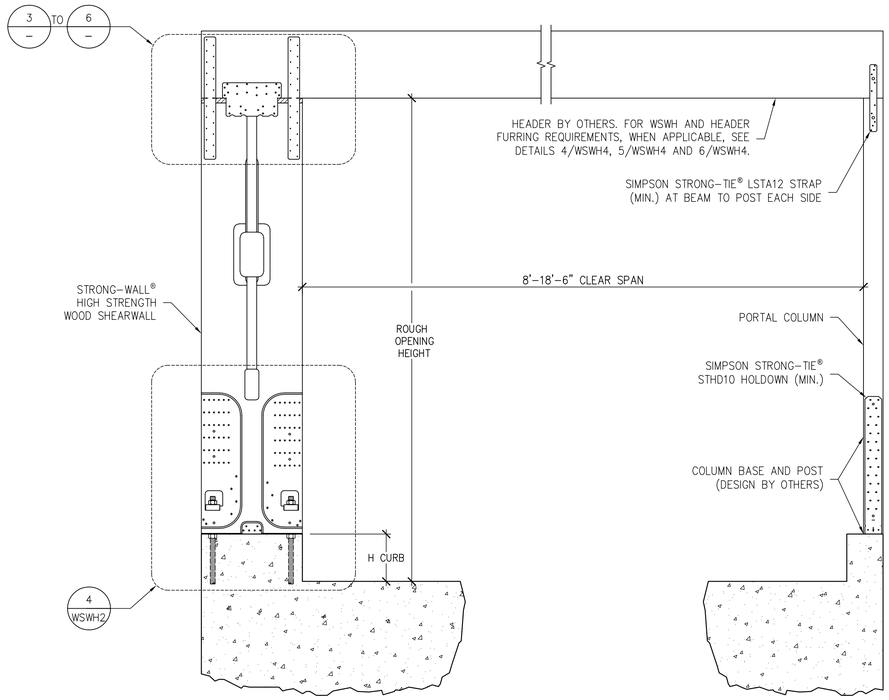

GARAGE HEADER ROUGH OPENING HEIGHT			
MODEL NO.	TRIMMED PANEL HEIGHT	H CURB	ROUGH OPENING HEIGHT
WSWH12x7 WSWH18x7 WSWH24x7	78"	5½"	6'-11½"
		6"	7'-0"
WSWH12x8 WSWH18x8 WSWH24x8	85½"	0"	7'-1½"
	93¼"	5½"	8'-2¾"
		6"	8'-3¼"

NOTES :
1. IF REQUIRED ROUGH OPENING HEIGHT EXCEEDS TABLE VALUE, SPECIFY NEXT TALLER PANEL AND TRIM AS NECESSARY. THE STRONG-WALL® HIGH STRENGTH WOOD SHEARWALL MAY BE TRIMMED TO A MINIMUM HEIGHT OF 74½".
2. FURRING DOWN GARAGE HEADER MAY BE REQUIRED FOR CORRECT ROUGH OPENING HEIGHT.

DESIGNER IS PERMITTED TO MODIFY DETAILS FOR SPECIFIC CONDITIONS.

ENSURE CONCRETE IS LEVEL AND SMOOTH BENEATH PANEL. GRIND OR FILL AS NECESSARY.

STRONG-WALL® HIGH STRENGTH WOOD SHEARWALL SINGLE PORTAL ASSEMBLY — 1

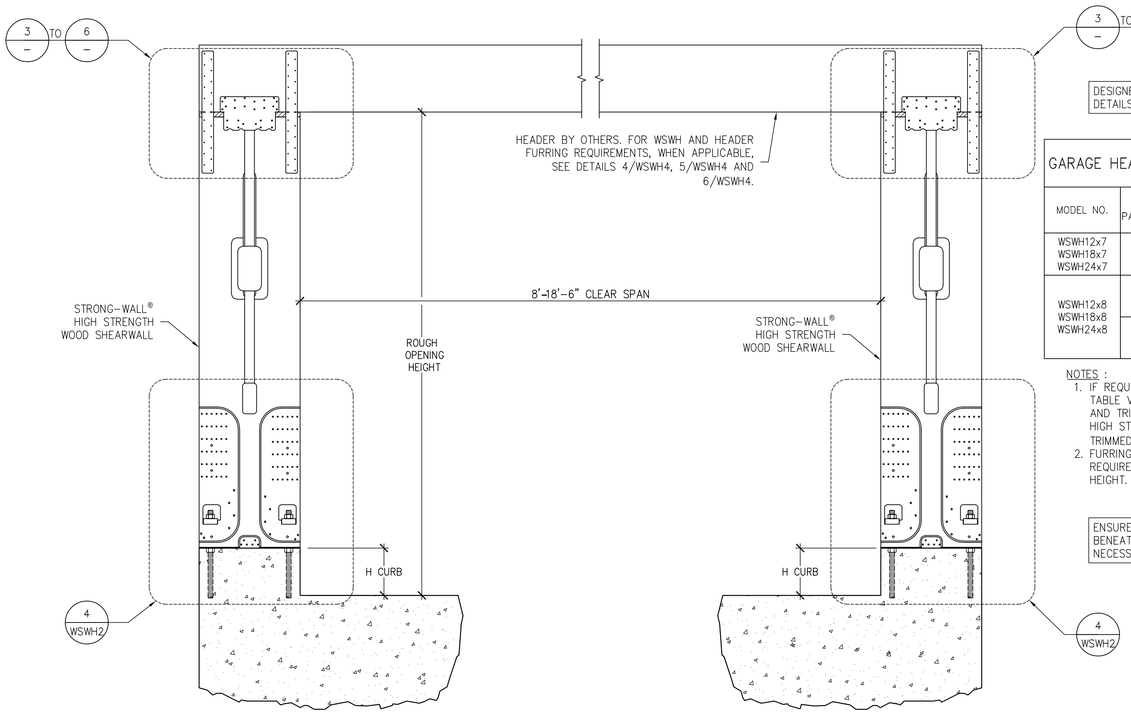

DESIGNER IS PERMITTED TO MODIFY DETAILS FOR SPECIFIC CONDITIONS.

GARAGE HEADER ROUGH OPENING HEIGHT			
MODEL NO.	TRIMMED PANEL HEIGHT	H CURB	ROUGH OPENING HEIGHT
WSWH12x7 WSWH18x7 WSWH24x7	78"	5½"	6'-11½"
		6"	7'-0"
WSWH12x8 WSWH18x8 WSWH24x8	85½"	0"	7'-1½"
	93¼"	5½"	8'-2¾"
		6"	8'-3¼"

NOTES :
1. IF REQUIRED ROUGH OPENING HEIGHT EXCEEDS TABLE VALUE, SPECIFY NEXT TALLER PANEL AND TRIM AS NECESSARY. THE STRONG-WALL® HIGH STRENGTH WOOD SHEARWALL MAY BE TRIMMED TO A MINIMUM HEIGHT OF 74½".
2. FURRING DOWN GARAGE HEADER MAY BE REQUIRED FOR CORRECT ROUGH OPENING HEIGHT.

ENSURE CONCRETE IS LEVEL AND SMOOTH BENEATH PANEL. GRIND OR FILL AS NECESSARY.

STRONG-WALL® HIGH STRENGTH WOOD SHEARWALL DOUBLE PORTAL ASSEMBLY — 2

DESIGNER IS PERMITTED TO MODIFY DETAILS FOR SPECIFIC CONDITIONS.

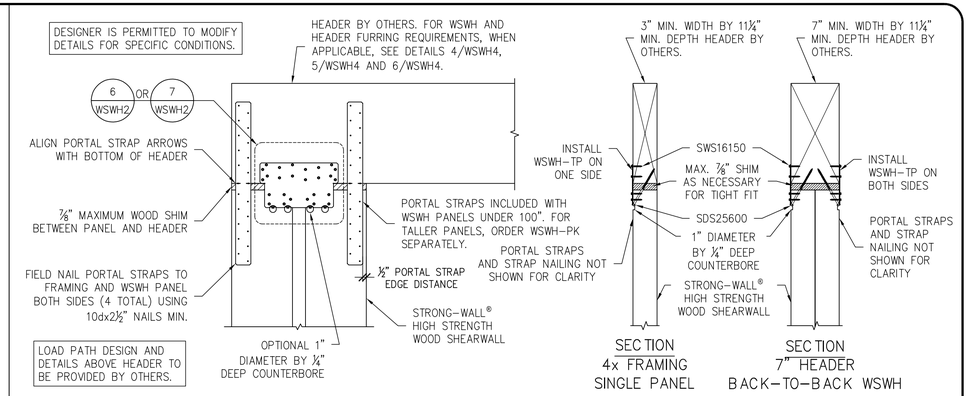

PORTAL TOP CONNECTION — 3

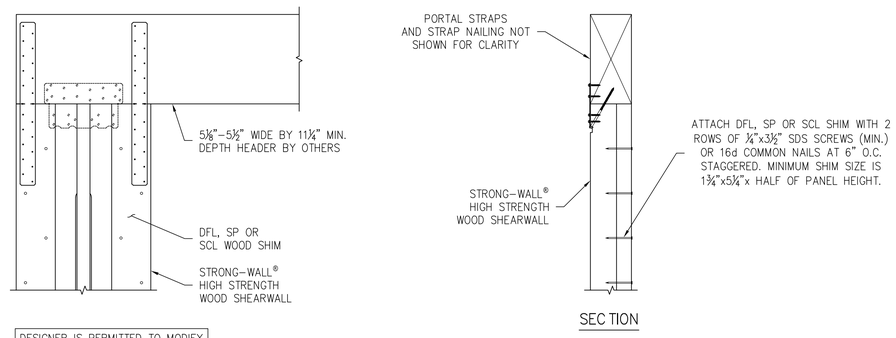

DESIGNER IS PERMITTED TO MODIFY DETAILS FOR SPECIFIC CONDITIONS.

FURRING FOR 5⅛" TO 5½" HEADER — 4

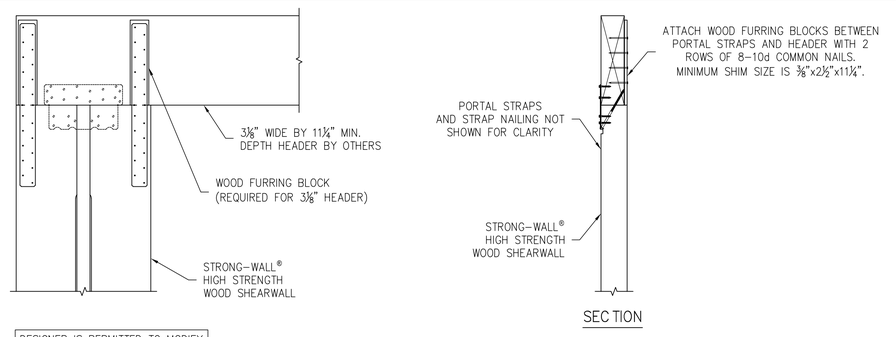

DESIGNER IS PERMITTED TO MODIFY DETAILS FOR SPECIFIC CONDITIONS.

FURRING FOR 3⅛" HEADER — 5

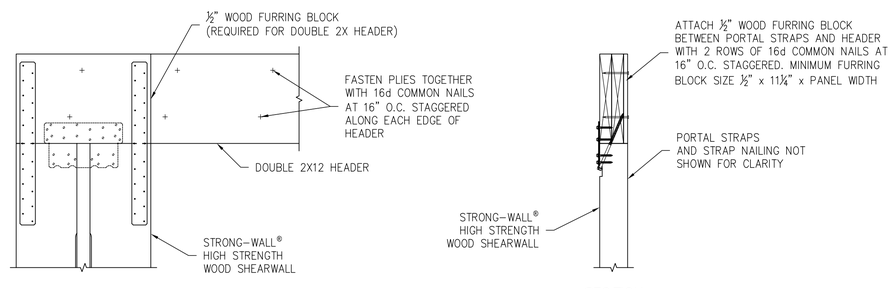

DESIGNER IS PERMITTED TO MODIFY DETAILS FOR SPECIFIC CONDITIONS.

FURRING FOR DOUBLE 2X12 HEADERS — 6

NO.	DATE	REVISIONS
0	11-23-2020	FIRST RELEASE - 2018 IBC
1	03-16-2021	2021 IBC REVISIONS

SIMPSON Strong-Tie, Co. Inc.
• 5956 W. Las Positas Blvd. Pleasanton, CA 94588
• Tel: (800) 999-5099
• Website: www.strongtie.com

SIMPSON Strong-Tie — THERE IS NO EQUAL

STRONG-WALL® WSWH
PORTAL SYSTEM
FRAMING DETAILS
ENGINEERED DESIGNS

SIMPSON Strong-Tie — THERE IS NO EQUAL

NAME	
DATE	03-16-2021
SCALE	N.T.S.
CHECKED	
SHEET	WSWH4
	OF SHEETS
JOB NO.	

ITEM NO.	PART NUMBER	DESCRIPTION	QTY.
1	03-009-01	BASE PLATE	2
2	03-001-01	TERMINAL POST (6005 TS ALUM.)	2
3	03-004-01	RECTANGULAR TOP RAIL (6082 T6 ALUM.)	1
4	03-006-01	TOP RAIL SNAP COVER (6082 T6 ALUM.)	1
5	03-005-01	RECTANGULAR RAIL END	1
6	Mirror03-005-01	RECTANGULAR RAIL END (ADC12 ALUM.)	1
7	01-008S-01 OR 01-028S-01	FIELD THREADED TERMINAL	13
8	01-0008-01 OR 01-028-01	FIELD THREADED TENSIONER	13
9	Stainless Cable	1/8" or 3/16" DIA.	13
10	Stainless Washer	STD	26
11	Stainless Hex Nut	STD	26
12	Stainless Acorn Nut	STD	26
13	6-32 SS TYPE	STD	4
14	1/4-20x2 1/2 PHIL FH T/F 410 SS	STD	8
15	LAG BOLT	STD	8

*NOTE:
GUARDRAIL SHALL WITHSTAND 200 LBS PER LINEAL FT. AT RIGHT ANGLE TO THE TOP OF THE RAIL

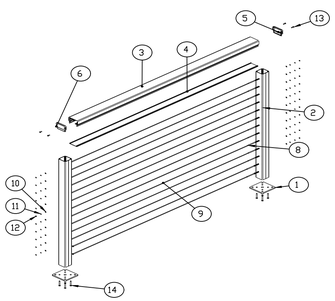

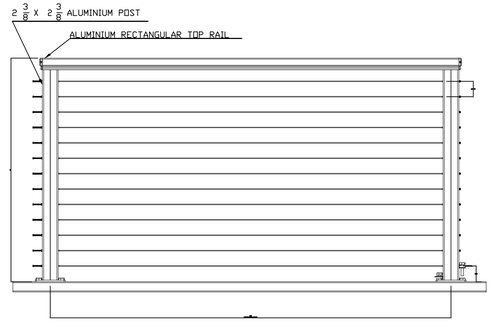

LEVEL 42" STANDARD GUARD RAILING

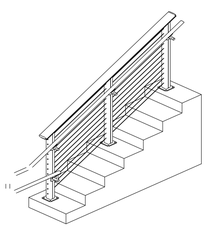

STAINLESS STEEL HAND RAIL

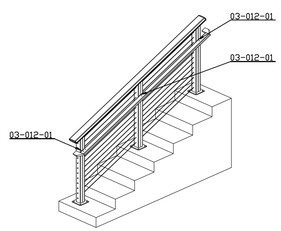

POST-TO-POST STAND ALONE HAND RAIL

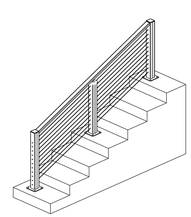

POST-TO-POST STAIR HAND RAIL

STAIRS 42" STANDARD GUARD RAILING

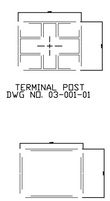

TERMINAL POST DWG NO. 03-001-01

INTERMEDIATE POST DWG NO. 03-001-02

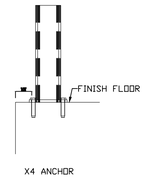

X4 ANCHOR

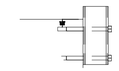

X2 ANCHOR

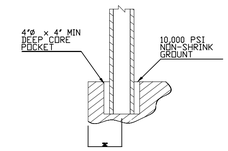

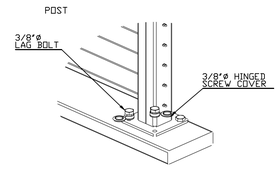

DECK MOUNT

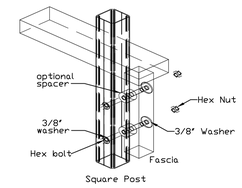

FASCIA MOUNT

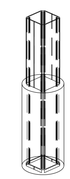

CORE MOUNT

TYPICAL MOUNTING OPTIONS

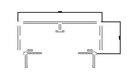

RECTANGULAR DWG NO. 03-004-01

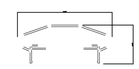

SHAPED DWG NO. 03-002-01

WOOD DWG NO. 07-003-01

TOP RAIL OPTIONS

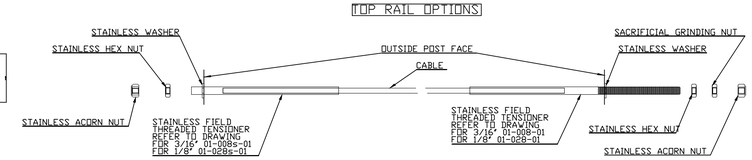

CABLE ATTACHMENT DETAIL

NOTE:
1. CUT EXCESS THREAD
2. REMOVE SACRIFICIAL NUT.
3. SCREW ON ACORN NUT.

POWDER COAT OPTION :

BLACK		BRONZE		WHITE		CLAX		NATURAL	

REV	DATE	DESCRIPTION OF CHANGE	ECN	BY.	APPR

REVISIONS

SC&R Stainless Cable & Railing

TOLERANCES
XX ±.25 UNLESS
XXX ±.005 OTHERWISE
ANGULAR ±0.5° SPECIFIED
FRACTIONAL ±1/32

THIS DRAWING IS THE PROPERTY OF STAINLESS CABLE & RAILING AND PROTECTED BY COPYRIGHT LAW AS WELL AS UNPUBLISHED WORK. IT MAY NOT BE REPRODUCED OR USED FOR ANYTHING WITHOUT EXPRESS WRITTEN PERMISSION FROM SC&R

TITLE : CABLEVIEW ® ALUMINIUM 42" RAILING

DRAWN BY.	DATE	PROJECT	DRG NO.	SHEET
PA	**	**	CV-A42	1 OF 1

3 CABLE HANDRAIL DETIALS

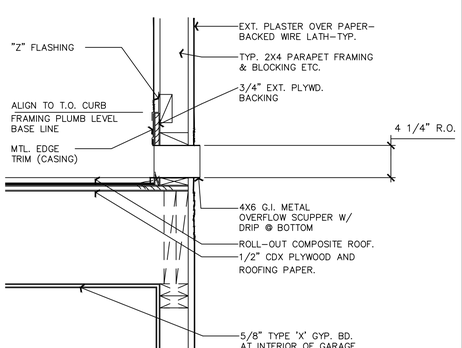

DRAINAGE/PARAPET NOT TO SCALE 9

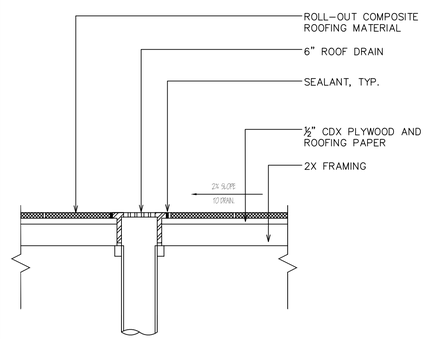

ROOF DRAIN NOT TO SCALE 8

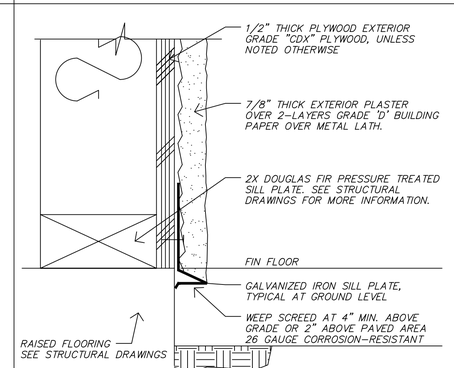

FTG. WATERPROOFING SCALE 3"=1'-0" 7

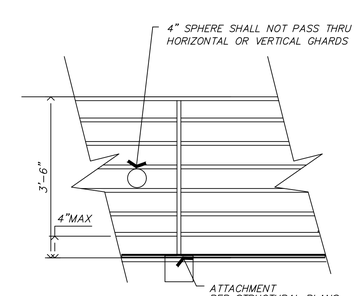

GUARDRAIL SCALE N.T.S. 5

Mark M. Wheeler
April 1, 2024

REVISIONS	–
	–
–	–
–	–

The Cirks Residence
3542 VENTURE DRIVE ~ TRINIDAD ISLAND ~ HUNTINGTON BEACH, 92648

mark wheeler
RESIDENTIAL DESIGN
325 ROYCROFT AVENUE
LONG BEACH, CA. 90814
562-619-3945
562-619-3990
562-684-0570

DATE: 4-1-24
SCALE: 1/4"=1'-0"
DRAWN:
JOB:
SHEET: A-8.0
OF – SHEETS