HTBC2 - 06A
CRAN - RLOS - HTBC2 - 06A
CRAN / SMALL CELL
USID: 228843
PACE #: TBD

AT&T

PICO / EXISTING WOOD POLE
POLE I.D. # : 1842292E
[NEAREST ADDRESS:] 16541 GOTHARD ST
HUNTINGTON BEACH, CA 92647
UNIQUE METER ADDRESS: TBD

ALL WORK AND MATERIALS SHALL BE PERFORMED AND INSTALLED IN ACCORDANCE WITH THE CURRENT EDITIONS OF THE FOLLOWING CODES AS ADOPTED BY THE LOCAL GOVERNING AUTHORITIES. NOTHING IN THESE PLANS IS TO BE CONSTRUCTED TO PERMIT WORK NOT CONFORMING TO THESE CODES.

1. 2016 CALIFORNIA ADMINISTRATIVE CODE
2. 2016 CALIFORNIA BUILDING CODE
3. 2016 CALIFORNIA ELECTRIC CODE
4. 2016 CALIFORNIA MECHANICAL CODE
5. 2016 CALIFORNIA PLUMBING CODE
6. 2016 CALIFORNIA FIRE CODE
7. ANY LOCAL BUILDING CODE AMENDMENTS TO THE ABOVE
8. CITY/COUNTY ORDINANCES

HANDICAP REQUIREMENTS:

FACILITY IS UNMANNED AND NOT FOR HUMAN HABITATION. HANDICAPPED ACCESS NOT REQUIRED IN ACCORDANCE WITH CALIFORNIA ADMINISTRATIVE STATE CODE PART 2, TITLE 24, CHAPTER 11B, SECTION 1103B.

CODE COMPLIANCE

THE FACILITY IS UNMANNED AND NOT FOR HUMAN HABITATION. A TECHNICIAN WILL VISIT THE SITE AS REQUIRED FOR ROUTINE MAINTENANCE. THE PROJECT WILL NOT RESULT IN ANY SIGNIFICANT DISTURBANCE OR EFFECT ON DRAINAGE; NO SANITARY SEWER SERVICE, POTABLE WATER, OR TRASH DISPOSAL IS REQUIRED AND NO COMMERCIAL SIGNAGE IS NEW.

GENERAL NOTES

811 Know what's below. Call before you dig.

TO OBTAIN LOCATION OF PARTICIPANTS UNDERGROUND FACILITIES BEFORE YOU DIG IN CALIFORNIA (SOUTH), CALL DIG ALERT
TOLL FREE: 1-800-227-2600 OR
www.digalert.org
CALIFORNIA STATUTE REQUIRES MIN OF 2 WORKING DAYS NOTICE BEFORE YOU EXCAVATE

PROPERTY OWNER:	PUBLIC RIGHT OF WAY
POLE OWNER:	JOINT POLE ASSOCIATION (JPA)
POWER PROVIDER:	SOUTHERN CALIFORNIA EDISON (SCE) P.O. BOX 700 ROSEMEAD, CA 91770 CONTACT: YOLANDA HUNTER PHONE: (909) 477-6471
APPLICANT: ADDRESS:	AT&T 1452 EDINGER AVE. TUSTIN, CA 92780
LATTITUDE (NAD83):	33° 43' 21.12" N 33.7225333°
LONGITUDE (NAD 83):	118° 0' 1.01" W -118.000280°
LONGITUDE/LATITUDE TYPE:	NAD 83
GROUND ELEVATION (NAVD 88):	±17.6' AMSL
ADJACENT APN #:	142-492-01
JURISDICTION:	CITY OF HUNTINGTON BEACH
CURRENT ZONING:	PUBLIC RIGHT OF WAY
NEW USE:	UNMANNED TELECOMMUNICATIONS

SITE INFORMATION

PROJECT MANAGER:
EUKON
65 POST, SUITE 1000
IRVINE, CA 92618
CONTACT: TIM MILLER
PHONE: (949) 231-9557
EMAIL: Tim.Miller@eukongroup.com

ENGINEER:
EUKON
65 POST, SUITE 1000
IRVINE, CA 92615
CONTACT: JEFF JACOBS
(949) 553-8566
EMAIL: Jeff.Jacobs@eukongroup.com

SAC/ZONING/PERMITTING:
TBD

CONSTRUCTION MANAGER:
TBD

RF ENGINEER:
AT&T
1452 EDINGER AVE.
TUSTIN, CA 92780
CONTACT: TEJ BURGULA
EMAIL: tb861h@att.com

SENIOR TECHNICAL PROJECT MANAGER:
AT&T
1452 EDINGER AVE., 2ND FLOOR.,
TUSTIN, CA 92780
CONTACT: OMAR MERE
EMAIL: om5039@att.com

PROJECT TEAM

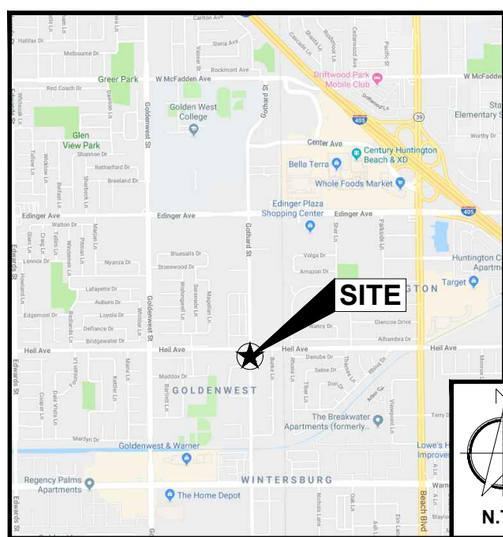

VICINITY MAP

LOCAL MAP

DIRECTIONS FROM AT&T OFFICE:

1452 EDINGER AVE, TUSTIN, CA 92780. DEPART EDINGER AVE TOWARD RED HILL AVE. TURN LEFT ONTO EDINGER AVE. USE THE LEFT 2 LANES TO TURN LEFT ONTO THE STATE ROUTE 55 S RAMP. MERGE ONTO STATE RTE 55 S. USE THE RIGHT 2 LANES TO TAKE EXIT 6A TO MERGE ONTO I-405 N. USE THE RIGHT 2 LANES TO TAKE EXIT 16 TO MERGE ONTO BEACH BLVD TOWARD HUNTINGTON BEACH. MERGE ONTO BEACH BLVD. TURN RIGHT ONTO HEIL AVE. TURN LEFT. TURN LEFT. ARRIVE AT 16541 GOTHARD ST, HUNTINGTON BEACH, CA 92647.

DRIVING DIRECTIONS

IF USING 11"X17" PLOT, DRAWINGS WILL BE HALF SCALE

CONSTRUCTION DRAWING

THE FOLLOWING PARTIES HEREBY APPROVE AND ACCEPT THESE DOCUMENTS & AUTHORIZE THE SUBCONTRACTOR TO PROCEED WITH THE CONSTRUCTION DESCRIBED HEREIN. ALL DOCUMENTS ARE SUBJECT TO REVIEW BY THE LOCAL BUILDING DEPARTMENT & MAY IMPOSE CHANGES OR MODIFICATIONS.

APPROVED BY:	INITIALS:	DATE:
AT&T RF ENGINEER:		
AT&T OPERATIONS:		
SITE ACQUISITION MANAGER:		
PROJECT MANAGER:		
ZONING VENDOR:		
LEASING VENDOR:		
CONSTRUCTION MANAGER:		
A/E MANAGER:		
PROPERTY OWNER:		
UTILITY:		

APPROVALS

AT&T PROPOSES TO INSTALL A NEW WIRELESS FACILITY. THE SCOPE WILL CONSIST OF THE FOLLOWING:

- EXISTING 55', CLASS 3, WOOD POLE TO REMAIN
- INSTALL (1) NEW STEEL SINGLE-ARM MOUNT ON EXISTING WOOD POLE
- INSTALL (1) OMNI CANISTER ANTENNA ON EXISTING WOOD POLE
- INSTALL (2) RADIO 2203 ON EXISTING WOOD POLE
- INSTALL (1) RADIO 2205 ON EXISTING WOOD POLE
- INSTALL (1) FUTURE RADIO ON EXISTING WOOD POLE
- INSTALL (1) NEW DISCONNECT SWITCH WITH INTEGRATED SURGE SUPPRESSION
- INSTALL (2) CONDUIT RISERS ON EXISTING WOOD POLE
- INSTALL (1) NEW 10"x15" PULL BOX FOR FIBER BY AT&T MOBILITY
- INSTALL (1) WTR/FSB ON POLE
- INSTALL (1) AT&T 2" FIBER CONDUIT FROM H.H TO SITE POLE
- SCE TO INSTALL NEW TRANSFORMER

PROJECT DESCRIPTION

SHEET	DESCRIPTION
T-1	TITLE SHEET
T-2	GENERAL NOTES, LEGEND AND ABBREVIATIONS
A-1	SITE PLAN
A-2	ENLARGED SITE PLAN
A-3	NEW AND EXISTING SOUTH ELEVATIONS
A-4	NEW AND EXISTING EAST ELEVATIONS
A-5	SITE IMAGE
A-6	EQUIPMENT DETAILS
A-7	CONSTRUCTION DETAILS
E-1	ELECTRICAL AND GROUNDING DETAILS

SHEET INDEX

SUBCONTRACTOR SHALL VERIFY ALL PLANS & EXISTING DIMENSIONS & CONDITIONS ON THE JOB SITE & SHALL IMMEDIATELY NOTIFY THE ENGINEER IN WRITING OF ANY DISCREPANCIES BEFORE PROCEEDING WITH THE WORK OR BE RESPONSIBLE FOR SAME.

DO NOT SCALE DRAWINGS

APPLICANT:

AT&T
1452 EDINGER AVE.
TUSTIN, CA 92780

ENGINEER:

Eukon
an SFC Communications, Inc. Company
65 POST, SUITE 1000
IRVINE, CA 92618
TEL: (949) 553-8566
www.eukongroup.com

CHECKED BY A&E:	RB
CHECKED BY OSP:	RB

REVISIONS:

REV	DATE	DESCRIPTION	BY
1	01/04/19	100% CONSTRUCTION DWG	SM
A	11/12/18	90% CONSTRUCTION DWG	AE

LICENSER:

PROJECT INFORMATION:

HTBC2 - 06A

16541 GOTHARD ST
HUNTINGTON BEACH, CA 92647

SHEET TITLE:

TITLE SHEET

SHEET NUMBER:

T-1

GENERAL NOTES AND CONDITIONS

SYMBOL	DESCRIPTION
EOD	EDGE OF DIRT
W/L	WHITE LINE
ROW	RIGHT OF WAY
EOP	EDGE OF PAVEMENT
C/L	CENTER LINE
C/F	CURBFACE
P/L	PROPERTY LINE
	EXISTING CUT
	FENCE
	WALL
	DRIVEWAY
	BUSHES
	TREE
	STREET LIGHT SITE POLE
	STREET LIGHT EXISTING
	JPA SITE POLE
	UTILITY POLE EXISTING
	PARKING METER/STREET SIGN
	DOWN GUY
	FIRE HYDRANT
	UTILITY VALVE
	UTILITY MANHOLE
	SEWER MANHOLE
	SQUARE VENT
	ROUND VENT
	DIG-ALERTS
	(POC) POINT OF CURBFACE
	ADA CURB RAMP

LEGEND AND ABBREVIATIONS | 1

INTENT

1. THESE CONSTRUCTION DRAWINGS DESCRIBE THE WORK TO BE DONE & THE MATERIALS TO BE FURNISHED FOR CONSTRUCTION.
2. THE INTENTION OF THE DOCUMENTS IS TO INCLUDE ALL LABOR AND MATERIALS REASONABLY NECESSARY FOR THE PROPER EXECUTION AND COMPLETION OF THE WORK AS STIPULATED IN THE CONTRACT.
3. THE PURPOSE OF THE SPECIFICATIONS IS TO INTERPRET THE INTENT OF THE DRAWINGS AND TO DESIGNATE THE METHOD OF THE PROCEDURE, TYPE AND QUALITY OF MATERIALS REQUIRED TO COMPLETE THE WORK.
4. MINOR DEVIATIONS FROM THE DESIGN LAYOUT ARE ANTICIPATED AND SHALL BE CONSIDERED AS PART OF THE WORK. NO CHANGES THAT ALTER THE CHARACTER OF THE WORK WILL BE MADE OR PERMITTED BY THE OWNER WITHOUT ISSUING A CHANGE ORDER.

CONFLICTS

1. THE CONTRACTOR SHALL BE RESPONSIBLE FOR VERIFICATION OF ALL MEASUREMENTS AT THE SITE BEFORE ORDERING ANY MATERIALS OR DOING ANY WORK. NO EXTRA CHARGE OR COMPENSATION SHALL BE ALLOWED DUE TO DIFFERENCE BETWEEN ACTUAL DIMENSIONS AND DIMENSIONS INDICATED IN THE CONSTRUCTION DRAWINGS. ANY SUCH DISCREPANCY IN DIMENSIONS WHICH MAY BE FOUND SHALL BE SUBMITTED TO THE OWNER FOR CONSIDERATION BEFORE THE CONTRACTOR PROCEEDS WITH THE WORK IN THE AFFECTED AREAS.
2. THE BIDDER, IF AWARDED THE CONTRACT, WILL NOT BE ALLOWED ANY EXTRA COMPENSATION BY REASON OF ANY MATTER OR THING CONCERNING WHICH SUCH BIDDER MIGHT HAVE FULLY INFORMED THEMSELVES PRIOR TO THE BIDDING.
3. NO PLEA OF IGNORANCE OF CONDITIONS THAT EXIST, OR OF DIFFICULTIES OR CONDITIONS THAT MAY BE ENCOUNTERED OR OF ANY OTHER RELEVANT MATTER CONCERNING THE WORK TO BE PERFORMED IN THE EXECUTION OF THE WORK WILL BE ACCEPTED AS AN EXCUSE FOR ANY FAILURE OR OMISSION ON THE PART OF THE CONTRACTOR TO FULFILL EVERY DETAIL OF ALL THE REQUIREMENTS OF THE CONTRACT DOCUMENTS GOVERNING THE WORK.

WARRANTIES & BONDS

1. CONTRACTOR IS RESPONSIBLE FOR APPLICATION AND PAYMENT OF CONTRACTOR LICENSES AND BONDS.
2. SEE MASTER CONTRACTION SERVICES AGREEMENT FOR ADDITIONAL DETAILS.

STORAGE

1. ALL MATERIALS MUST BE STORED IN A LEVEL AND DRY FASHION AND IN A MANNER THAT DOES NOT NECESSARILY OBSTRUCT THE FLOW OF OTHER WORK.
2. BTS CABINETS MUST BE STORED INSIDE UNTIL THERE IS POWER ON SITE.
3. STORAGE METHOD MUST MEET ALL RECOMMENDATIONS OF THE ASSOCIATED MANUFACTURER.

RELATED DOCUMENTS AND COORDINATION

1. GENERAL CONSTRUCTION, ELECTRICAL AND ANTENNA DRAWINGS ARE INTERRELATED. IN PERFORMANCE OF THE WORK, THE CONTRACTOR MUST REFER TO ALL DRAWINGS. ALL COORDINATION SHALL BE THE RESPONSIBILITY OF THE CONTRACTOR.

CHANGE ORDER PROCEDURE

1. CHANGE ORDERS MAY BE INITIATED BY THE OWNER AND/OR THE CONTRACTOR INVOLVED. THE CONTRACTOR, UPON VERBAL REQUEST FROM THE OWNER SHALL PREPARE A WRITTEN PROPOSAL DESCRIBING THE CHANGE IN WORK OR MATERIALS AND ANY CHANGES IN THE CONTRACT AMOUNT AND PRESENT TO THE OWNER WITHIN 72 HRS FOR APPROVAL. SUBMIT REQUESTS FOR SUBSTITUTIONS IN THE FORM AND IN ACCORDANCE WITH PROCEDURES REQUIRED FOR CHANGE ORDER PROPOSALS. ANY CHANGES IN THE SCOPE OF WORK OR MATERIALS WHICH ARE PERFORMED BY THE CONTRACTOR WITHOUT A WRITTEN CHANGE ORDER AS DESCRIBED & APPROVED BY THE OWNER SHALL PLACE FULL RESPONSIBILITY OF THESE ACTIONS ON THE CONTRACTOR.

SHOP DRAWINGS

1. CONTRACTOR SHALL SUBMIT SHOP DRAWINGS AS REQUIRED AND LISTED IN THESE DRAWINGS TO THE OWNER FOR APPROVAL.
2. ALL SHOP DRAWINGS SHALL BE REVIEWED, CHECKED AND CORRECTED BY CONTRACTOR PRIOR TO SUBMITTAL TO THE OWNER.

PRODUCTS & SUBSTITUTIONS

1. SUBMIT 3 COPIES OF EACH REQUEST FOR SUBSTITUTION. IN EACH REQUEST IDENTIFY THE PRODUCT OR FABRICATION OR INSTALLATION METHOD TO BE REPLACED BY THE SUBSTITUTION INCLUDE RELATED SPECIFICATION SECTION AND DRAWING NUMBERS AND COMPLETE DOCUMENTATION SHOWING COMPLIANCE WITH THE REQUIREMENTS FOR SUBSTITUTIONS.
2. SUBMIT ALL NECESSARY PRODUCT DATA AND CUT SHEETS WHICH PROPERLY INDICATE AND DESCRIBE THE ITEMS, PRODUCTS & MATERIALS BEING INSTALLED. THE CONTRACTOR SHALL, IF DEEMED NECESSARY BY THE OWNER SUBMIT ACTUAL SAMPLES TO THE OWNER FOR APPROVAL IN LIEU OF CUT SHEETS.

CODE COMPLIANCE

1. ALL WORK SHALL BE IN ACCORDANCE WITH APPLICABLE LOCAL, STATE AND FEDERAL REGULATIONS. THESE SHALL INCLUDE BUT NOT BE LIMITED TO THE LATEST VERSION OF THE FOLLOWING:
   - 2016 CALIFORNIA ENERGY CODE
   - 2016 CALIFORNIA BUILDING CODE
   - 2016 CALIFORNIA ELECTRICAL CODE
   - 2016 CALIFORNIA FIRE CODE
   - 2016 CALIFORNIA GREEN BUILDING CODE
   - 2016 CALIFORNIA MECHANICAL CODE
   - 2016 CALIFORNIA PLUMBING CODE
   - GO95/GO128

INSURANCE AND BONDS

1. CONTRACTOR SHALL AT THEIR OWN EXPENSE CARRY AND MAINTAIN FOR THE DURATION OF THE PROJECT ALL INSURANCE AS REQUIRED AND LISTED.
2. CONTRACTOR SHALL NOT COMMENCE WITH THEIR WORK UNTIL THEY HAVE PRESENTED AN ORIGINAL CERTIFICATE OF INSURANCE STATING ALL COVERAGE'S TO THE OWNER.
3. THE OWNER SHALL BE NAMED AS AN ADDITIONAL INSURED ON ALL POLICIES.
4. REFER TO THE MASTER AGREEMENT FOR REQUIRED INSURANCE LIMITS.

ADMINISTRATION

1. BEFORE THE COMMENCEMENT OF ANY WORK, THE CONTRACTOR WILL ASSIGN A PROJECT MANAGER WHO WILL ACT AS A SINGLE POINT OF CONTACT FOR ALL PERSONNEL INVOLVED IN THIS PROJECT. THIS PROJECT MANAGER WILL BE DEVELOPING A MASTER SCHEDULE FOR THE PROJECT WHICH WILL SUBMITTED TO THE OWNER PRIOR TO THE COMMENCEMENT OF ANY WORK.
2. SUBMIT A BAR TYPE PROGRESS CHART NOT MORE THAN THREE (3) DAYS AFTER THE DATE ESTABLISHED FOR COMMENCEMENT OF THE WORK ON THE SCHEDULE, INDICATING A TIME BAR FOR EACH MAJOR CATEGORY OF WORK TO BE PERFORMED AT THE SITE, PROPERLY SEQUENCED AND COORDINATED WITH OTHER ELEMENTS OF WORK & SHOWING COMPLETION OF THE WORK SUFFICIENTLY IN ADVANCE OF THE DATE ESTABLISHED FOR SUBSTANTIAL COMPLETION OF THE SITE.
3. PRIOR TO COMMENCING CONSTRUCTION, THE OWNER SHALL SCHEDULE AN ON-SITE MEETING WITH ALL MAJOR PARTIES. THIS WOULD INCLUDE (THOUGH NOT LIMITED TO) THE OWNER, PROJECT MANAGER, CONTRACTOR, LAND OWNER REPRESENTATIVE, LOCAL TELEPHONE COMPANY, TOWER ERECTION FOREMAN (IF SUBCONTRACTED).
4. CONTRACTOR SHALL BE EQUIPPED WITH SOME MEANS OF CONSTANT COMMUNICATIONS, SUCH AS A MOBILE PHONE OR A BEEPER. THIS EQUIPMENT WILL NOT BE SUPPLIED BY THE BY THE OWNER, NOR WILL WIRELESS SERVICE BE ARRANGED.
5. DURING CONSTRUCTION, CONTRACTOR MUST ENSURE THAT EMPLOYEES AND SUBCONTRACTORS WEAR HARD HATS AT ALL TIMES. CONTRACTOR WILL COMPLY WITH ALL AT&T MOBILITY SAFETY REQUIREMENTS IN THEIR AGREEMENT.
6. PROVIDE WRITTEN DAILY UPDATES AND PHOTOGRAPHS OF ON SITE PROGRESS TO THE PROJECT MANAGER VIA E-MAIL.
7. A COMPLETE INVENTORY OF CONSTRUCTION MATERIALS AND EQUIPMENT IS REQUIRED PRIOR TO START OF CONSTRUCTION.
8. NOTIFY THE OWNER / PROJECT MANAGER IN WRITING NO LESS THAN 48 HOURS IN ADVANCE OF CONCRETE POURS, TOWER ERECTIONS, AND EQUIPMENT CABINET PLACEMENTS.
9. CLOSEOUT PACKAGE IS DUE COMPLETE WITH DETAILED TOP PHOTOS UPON SITE PUNCHWALK WITH PROJECT MANAGER (SEE PROJECT MANAGER FOR SAMPLE CLOSEOUT PACKAGE).

CLEAN UP

1. THE CONTRACTOR SHALL AT ALL TIMES KEEP THE SITE FREE FROM ACCUMULATION OF WASTE MATERIALS OR RUBBISH CAUSED BY THEIR EMPLOYEES AT WORK. AT THE COMPLETION OF THE WORK, THEY SHALL REMOVE ALL RUBBISH FROM AND ABOUT THE BUILDING AREA, INCLUDING ALL THEIR TOOLS, SCAFFOLDING AND SURPLUS MATERIALS AND SHALL LEAVE THEIR WORK CLEAN AND READY FOR USE.
2. VISUALLY INSPECT EXTERIOR SURFACES AND REMOVE ALL TRACES OF SOIL, WASTE MATERIALS, SMUDGES & OTHER FOREIGN MATTER.
3. REMOVE ALL TRACES OF SPLASHED MATERIALS FROM ADJACENT SURFACES.
4. IF NECESSARY TO ACHIEVE A UNIFORM DEGREE OF CLEANLINESS, HOSE DOWN THE EXTERIOR OF THE STRUCTURE.

GENERAL NOTES:

1. INDEMNIFICATION CLAUSE: THE CONTRACTOR AGREES AND SHALL:
   ASSUME SOLE AND COMPLETE RESPONSIBILITY OF THE JOBSITE CONDITIONS DURING THE COURSE OF CONSTRUCTION OF THIS PROJECT. INCLUDING THE SAFETY OF ALL PERSONS AND PROPERTIES. THAT THESE REQUIREMENTS SHALL APPLY CONTINUOUSLY AND NOT BE LIMITED TO NORMAL WORKING HOURS AND CONDITIONS. THE CONTRACTOR FURTHER AGREES TO DEFEND INDEMNITY AND HOLD AT&T MOBILITY, REPRESENTATIVES, AND ENGINEERS HARMLESS FROM ANY AND ALL LIABILITY, REAL OR ALLEGED IN CONNECTION WITH THE PERFORMANCE OF THE WORK ON THIS PROJECT.
2. PRIOR TO THE BEGINNING OF ANY CONSTRUCTION AND THROUGHOUT THE COURSE OF CONSTRUCTION WORK, THE CONTRACTOR SHALL FULLY COMPLY WITH "CALIFORNIA OCCUPATIONAL SAFETY AND HEALTH" ACT OF 1973 INCLUDING ALL REVISIONS AND AMENDMENTS THERETO.
3. ALL WORK SHALL CONFORM TO THE LATEST EDITION OF GO 95, 128, AND THE STANDARD "SPECIFICATIONS FOR PUBLIC WORKS CONSTRUCTION", AS ADOPTED BY THE CITY, COUNTY OR STATE AS MODIFIED BY STANDARD PLANS AND ADDENDUMS.
4. THE EXISTENCE AND LOCATION OF UTILITIES AND OTHER AGENCIES FACILITIES AS SHOWN HEREON ARE OBTAINED BY A SEARCH OF AVAILABLE RECORDS. OTHER FACILITIES MAY EXIST, THE CONTRACTOR SHALL VERIFY PRIOR TO THE START OF CONSTRUCTION AND SHALL USE EXTREME CARE AND PROTECTIVE MEASURES TO PREVENT DAMAGE TO THESE FACILITIES. THE CONTRACTOR IS RESPONSIBLE FOR THE PROTECTION OF ALL UTILITY OR AGENCY FACILITIES WITHIN THE LIMITS OR WORK, WHETHER THEY ARE SHOWN ON THIS PLAN OR NOT.
5. THE CONTRACTOR SHALL NOTIFY UNDERGROUND SERVICE ALERT (800) 227-2600, AT LEAST TWO WORKING DAYS PRIOR TO THE START OF ANY EXCAVATION.
6. THE CONTRACTOR SHALL NOTIFY THE CITY, COUNTY OR STATE ENGINEER INSPECTION DEPARTMENT AT LEAST TWO DAYS BEFORE THE START OF ANY WORK REQUIRING THEIR INVOLVEMENT.
7. ALL WORK AREA AND STREET TRAFFIC CONTROL SHALL BE IN ACCORDANCE WITH THE SPECIFICATIONS OF THE WORK AREA TRAFFIC CONTROL BOOK AND SPECIFICATIONS FROM THE CITY, COUNTY OR STATE.
8. THE CITY, COUNTY OR STATE SHALL SPECIFY THE EXPIRATION PERIOD OF THE PERMIT FOR THIS CONSTRUCTION PROJECT.
9. THE MINIMUM COVER FOR ALL CONDUITS PLACED UNDERGROUND SHALL BE 36 INCHES TO THE FINISHED GRADE AT ALL TIMES.
10. THE CONTRACTOR SHALL HDD OR OPEN TRENCH ALL CURB AND GUTTERS, CONCRETE DRIVEWAYS AND WALKWAYS AT THE DIRECTION OF THE CITY, COUNTY OR STATE INSPECTOR.
11. ALL AC. AND/OR CONCRETE PAVEMENT SHALL BE REPLACED AT THE DIRECTION OF THE CITY, COUNTY OR STATE ENGINEERS.
12. ALL SHRUBS, PLANTS OR TREES THAT HAVE BEEN DAMAGED OR DISTURBED DURING THE COURSE OF THE WORK, SHALL BE REPLANTED AND/OR REPLACED SO AS TO RESTORE THE WORK SITE TO ITS ORIGINAL CONDITION.
13. IF DAMAGE OCCURS TO THE CITY OR COUNTY FACILITIES, THE CONTRACTOR SHALL IMMEDIATELY NOTIFY, TRAFFIC CONTROL LIGHTING AND STREET LIGHTING
14. AT LEAST TWO DAYS PRIOR TO THE COMMENCEMENT OF ANY WORK, NOTIFY THE POLICE TRAFFIC BUREAU AND THE FIRE DEPARTMENT;
15. THE CONTRACTOR WILL BE RESPONSIBLE FOR THE PROCESSING OF ALL APPLICATION PERMIT FORMS ALONG WITH THE REQUIRED LIABILITY INSURANCE FORMS, CLEARLY DEMONSTRATING THAT THE CLIENT, THE CITY, COUNTY OR STATE AS ALSO INSURED WITH THE REQUIRED LIABILITY INSURANCE IN THE AMOUNT OF $_1,000,000.00_ FOR THIS CONSTRUCTION PROJECT.
16. VAULTS, PEDESTALS, CONDUITS AND OTHER TYPES OF SUBSTRUCTURE ARE EITHER SPECIFIED ON THIS PLAN OR WILL BE SPECIFIED BY THE CONSTRUCTION ENGINEER. ANY AND ALL DEVIATIONS FROM THE SPECIFIED TYPES OF MATERIAL MUST BE APPROVED BY THE SYSTEM ENGINEER, IN WRITING BEFORE INSTALLATION THEREOF.
17. ALL U.G. CONDUIT MUST BE SCHEDULE 40 OR BETTER.
18. CONDUIT REQUIREMENTS:
    UG-SCHEDULE 40 EXCEPT ALL RADIUS CONDUITS TO BE SCH. 80 RISERS-SCHEDULE 80.
19. GROUND REQUIREMENTS:
    5/8" ROD-10' LENGTH
    #2 GROUND WIRE
    WOOD MOLDING, STAPLED EVERY 3' AND AT EACH END GROUNDS 2' FROM POLE.
20. POWER REQUIREMENT FOR 3 WIRE SERVICE 120/240V.
21. CONTRACTOR SHALL NOTIFY POWER & TELCO COMPANIES THREE DAYS PRIOR TO START OF CONSTRUCTION FOR CONDUIT INSPECTION.
22. ANY AND ALL PROPOSED SITE MODIFICATIONS, EXPANSION, OR REARRANGEMENT OF THIS CELLULAR SITE MUST BE COMPLIANT WITH ALL GO 95, AND GO 128 REGULATIONS AS PRESCRIBED BY STATE LAW. FUTURE EXPANSION OF THIS CELLULAR SITE MUST BE APPROVED BY THE DESIGNING ENGINEERING FIRM OR AN EQUALLY QUALIFIED ENGINEERING COMPANY.

GENERAL NOTES | 2

APPLICANT:

AT&T
1452 EDINGER AVE.
TUSTIN, CA 92780

ENGINEER:

Eukon
an SFC Communications, Inc. Company
65 POST, SUITE 1000
IRVINE, CA 92618
TEL: (949) 553-8566
www.eukongroup.com

CHECKED BY A&E:	RB
CHECKED BY OSP:	RB

REVISIONS:

REV	DATE	DESCRIPTION	BY
1	01/04/19	100% CONSTRUCTION DWG	SM
A	11/12/18	90% CONSTRUCTION DWG	AE

LICENSER:

PROJECT INFORMATION:

HTBC2 - 06A

16541 GOTHARD ST
HUNTINGTON BEACH, CA 92647

SHEET TITLE:

GENERAL NOTES, LEGEND AND ABBREVIATIONS

SHEET NUMBER:

T-2

NOTES:

1. IT SHALL BE THE CONTRACTOR'S RESPONSIBILITY TO COORDINATE WITH THE PROPERTY OWNER & NECESSARY UTILITY COMPANIES FOR THE LOCATION OF ALL EXISTING BELOW GRADE UTILITIES PRIOR TO BEGINNING CONSTRUCTION. CONTRACTOR SHALL BE RESPONSIBLE FOR ANY DAMAGE COSTS ASSOCIATED WITH EXISTING BELOW GRADE UTILITIES.
2. CONTRACTOR TO COORDINATE WITH UTILITY COMPANY FOR CONNECTION OF TEMPORARY AND PERMANENT POWER TO THE SITE. THE TEMPORARY POWER AND ALL HOOKUP COSTS TO BE PAID BY CONTRACTOR.
3. CONTRACTOR TO VERIFY LOCAL UTILITY REQUIREMENTS FOR DEPTH, SIZE & SEPARATION OF CONDUITS PRIOR TO INSTALLATION. NOTIFY CONSTRUCTION MANAGER IMMEDIATELY OF ANY DISCREPANCIES.
4. CONTRACTOR TO CALL DIG ALERT (800)-227-2600 A MINIMUM OF 48 HRS PRIOR TO EXCAVATING FOR UNDERGROUND UTILITY LOCATIONS. CONTRACTOR IS RESPONSIBLE TO HAVE ALL NONPUBLIC UTILITIES LOCATED AT THEIR OWN EXPENSE.
5. NEW UTILITY SERVICES SHOWN NEED TO BE VERIFIED & APPROVED BY UTILITY COMPANIES BEFORE START OF CONSTRUCTION. CONTRACTOR TO VERIFY WITH CLIENT PROJECT MANAGER TO OBTAIN FINAL APPROVAL.
6. LINES SHOWN DO NOT REPRESENT THE EXACT LOCATION OF THE CONDUIT RUNS CONTRACTOR TO VERIFY SERVICE LOCATIONS w/ACTUAL FIELD CONDITIONS.
7. CONTRACTOR SHALL IMMEDIATELY INFORM CLIENT OF ANY ACCIDENTAL DAMAGE TO EXISTING UTILITIES BY TELEPHONE AND E-MAIL REGARDLESS OF ABILITY TO REPAIR OR MITIGATE. A FOLLOW-UP E-MAIL REPORT WITH DIGITAL PHOTOS WILL BE REQUIRED DAILY UNTIL RESOLUTION HAS BEEN ACCEPTED BY CLIENT AND AFFECTED SERVICE PROVIDERS AND RECIPIENTS. AT THEIR OWN EXPENSE, CONTRACTOR WILL EXERCISE ALL EFFORTS TO HAVE REPAIRS MADE BY QUALIFIED TECHNICIANS AS APPROVED BY SERVICE PROVIDER.

NOTE TO CONTRACTOR:

CONCRETE SIDEWALKS SHALL BE SAWCUT TO THE NEAREST SCORE MARK AND BE REPLACED EQUAL IN DIMENSION TO THAT REMOVED.

NOTE:

CONTRACTOR TO ALLOW INGRESS AND EGRESS TO DRIVEWAYS AT ALL TIMES DURING CONSTRUCTION.

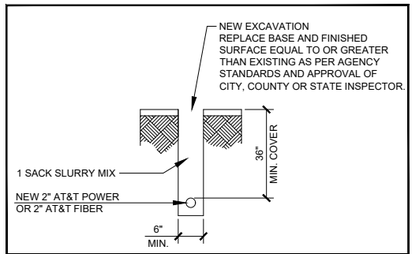

TYPICAL CONDUIT PLACEMENT DETAIL (TRENCH) N.T.S.

NEW FIBER HANDHOLE LOCATION		
HANDHOLE #	HANDHOLE SIZE	LOCATION
F HANDHOLE 1	10"x15"x18" (FIBER) HANDHOLE	130'-9"± S. C/L HEIL ST. & 34'-0"± N. C/L GOTHARD ST.

NEW ITEM #	DESCRIPTION
1	8'-0" SITE POLE TO ATTWL (FIBER) HANDHOLE #1 (1) 2" SCH. 40 PVC CONDUIT (AT&T FIBER)

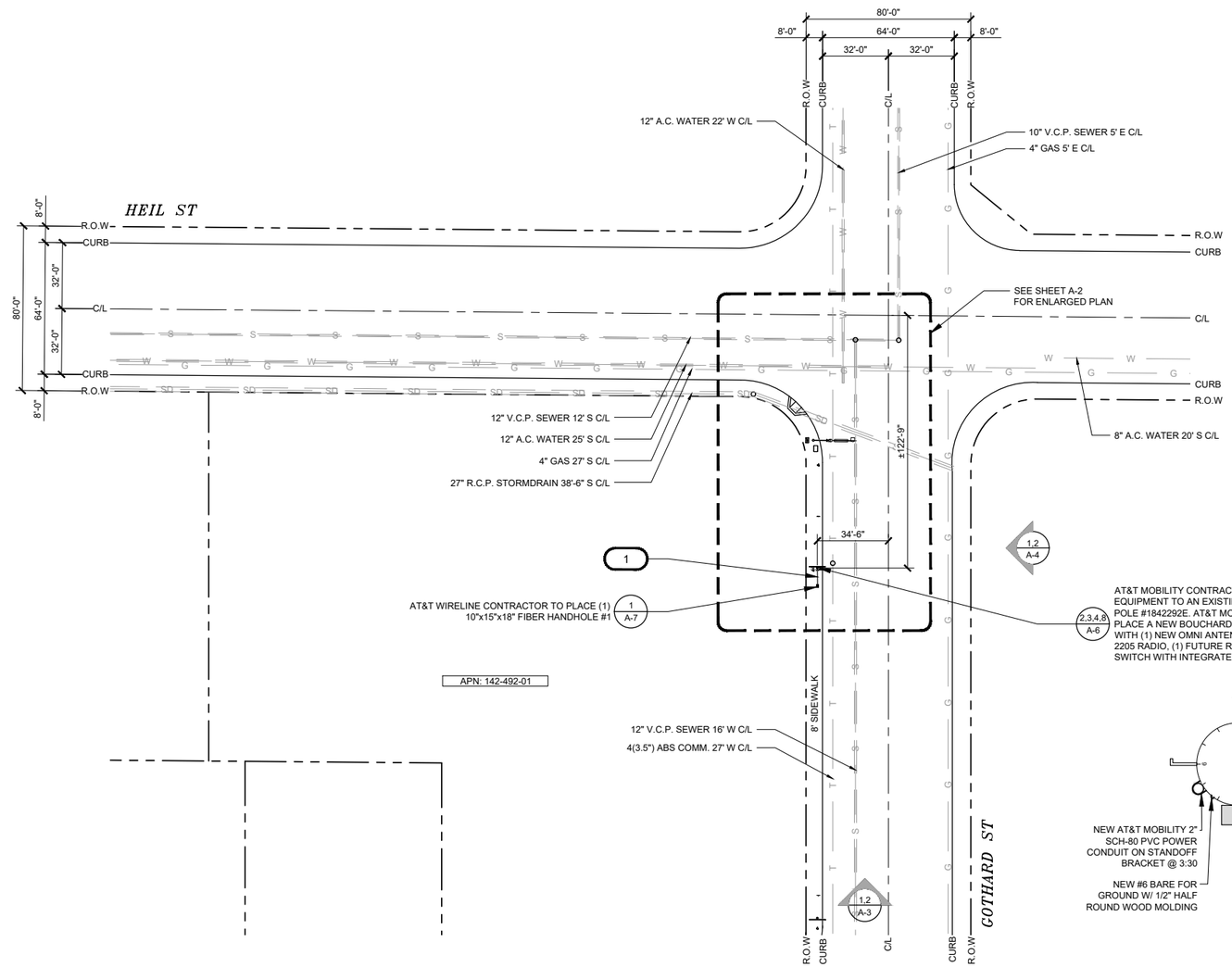

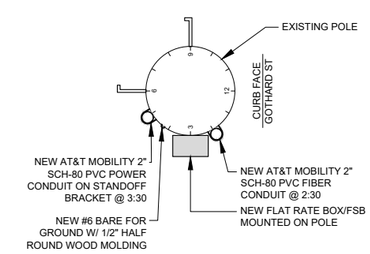

UNDERGROUND UTILITIES NOTE:

THE LOCATIONS AND EXISTENCE OF ANY UNDERGROUND PIPES, STRUCTURES OR CONDUITS SHOWN ON THIS PLAN WERE OBTAINED BY A SEARCH OF AVAILABLE RECORDS. THERE MAY BE EXISTING UTILITIES OTHER THAN THOSE SHOWN ON THIS PLAN. THE CONTRACTOR IS REQUIRED TO TAKE PRECAUTIONARY MEASURES TO PROTECT THE UTILITY LINES SHOWN AND ANY OTHER LINES NOT SHOWN ON THIS PLAN.

UTILITY LINETYPE LEGEND:

POWER		E	
PHONE		T	
WATER		W	
SEWER		S	
STORM DRAWN		SD	
GAS		G	
GASOLINE		GS	
OIL			

811 Know what's below. Call before you dig.

TO OBTAIN LOCATION OF PARTICIPANTS UNDERGROUND FACILITIES BEFORE YOU DIG IN CALIFORNIA (SOUTH), CALL DIG ALERT
TOLL FREE: 1-800-227-2600 OR www.digalert.org
CALIFORNIA STATUTE REQUIRES MIN OF 2 WORKING DAYS NOTICE BEFORE YOU EXCAVATE

CITY PERMIT INFORMATION

HDD / OPEN TRENCH A/C STREET FOOTAGE:	0
HDD / OPEN TRENCH CONC. PARKWAY FOOTAGE:	8'-0"
HDD / OPEN TRENCH GRASS/DIRT PARKWAY FOOTAGE:	0
HDD / OPEN TRENCH TOTAL PROJECT FOOTAGE:	8'-0"

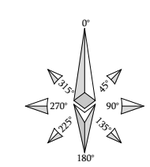

SITE PLAN

SCALE 1/32"=1'-0" 50' 25' 0' 25' 50' 100'

1

APPLICANT:

AT&T
1452 EDINGER AVE.
TUSTIN, CA 92780

ENGINEER:

Eukon
an SFC Communications, Inc. Company
65 POST, SUITE 1000
IRVINE, CA 92618
TEL: (949) 553-8566
www.eukongroup.com

CHECKED BY A&E:	RB
CHECKED BY OSP:	RB

REVISIONS:

REV	DATE	DESCRIPTION	BY
1	01/04/19	100% CONSTRUCTION DWG	SM
A	11/12/18	90% CONSTRUCTION DWG	AE

LICENSER:

PROJECT INFORMATION:

HTBC2 - 06A

16541 GOTHARD ST
HUNTINGTON BEACH, CA 92647

SHEET TITLE:

SITE PLAN

SHEET NUMBER:

A-1

NOTES:

1. IT SHALL BE THE CONTRACTOR'S RESPONSIBILITY TO COORDINATE WITH THE PROPERTY OWNER & NECESSARY UTILITY COMPANIES FOR THE LOCATION OF ALL EXISTING BELOW GRADE UTILITIES PRIOR TO BEGINNING CONSTRUCTION. CONTRACTOR SHALL BE RESPONSIBLE FOR ANY DAMAGE COSTS ASSOCIATED WITH EXISTING BELOW GRADE UTILITIES.
2. CONTRACTOR TO COORDINATE WITH UTILITY COMPANY FOR CONNECTION OF TEMPORARY AND PERMANENT POWER TO THE SITE. THE TEMPORARY POWER AND ALL HOOKUP COSTS TO BE PAID BY CONTRACTOR.
3. CONTRACTOR TO VERIFY LOCAL UTILITY REQUIREMENTS FOR DEPTH, SIZE & SEPARATION OF CONDUITS PRIOR TO INSTALLATION. NOTIFY CONSTRUCTION MANAGER IMMEDIATELY OF ANY DISCREPANCIES.
4. CONTRACTOR TO CALL DIG ALERT (800)-227-2600 A MINIMUM OF 48 HRS PRIOR TO EXCAVATING FOR UNDERGROUND UTILITY LOCATIONS. CONTRACTOR IS RESPONSIBLE TO HAVE ALL NONPUBLIC UTILITIES LOCATED AT THEIR OWN EXPENSE.
5. NEW UTILITY SERVICES SHOWN NEED TO BE VERIFIED & APPROVED BY UTILITY COMPANIES BEFORE START OF CONSTRUCTION. CONTRACTOR TO VERIFY WITH CLIENT PROJECT MANAGER TO OBTAIN FINAL APPROVAL.
6. LINES SHOWN DO NOT REPRESENT THE EXACT LOCATION OF THE CONDUIT RUNS CONTRACTOR TO VERIFY SERVICE LOCATIONS w/ACTUAL FIELD CONDITIONS.
7. CONTRACTOR SHALL IMMEDIATELY INFORM CLIENT OF ANY ACCIDENTAL DAMAGE TO EXISTING UTILITIES BY TELEPHONE AND E-MAIL REGARDLESS OF ABILITY TO REPAIR OR MITIGATE. A FOLLOW-UP E-MAIL REPORT WITH DIGITAL PHOTOS WILL BE REQUIRED DAILY UNTIL RESOLUTION HAS BEEN ACCEPTED BY CLIENT AND AFFECTED SERVICE PROVIDERS AND RECIPIENTS. AT THEIR OWN EXPENSE, CONTRACTOR WILL EXERCISE ALL EFFORTS TO HAVE REPAIRS MADE BY QUALIFIED TECHNICIANS AS APPROVED BY SERVICE PROVIDER.

NOTE TO CONTRACTOR:

CONCRETE SIDEWALKS SHALL BE SAWCUT TO THE NEAREST SCORE MARK AND BE REPLACED EQUAL IN DIMENSION TO THAT REMOVED.

NOTE:

CONTRACTOR TO ALLOW INGRESS AND EGRESS TO DRIVEWAYS AT ALL TIMES DURING CONSTRUCTION.

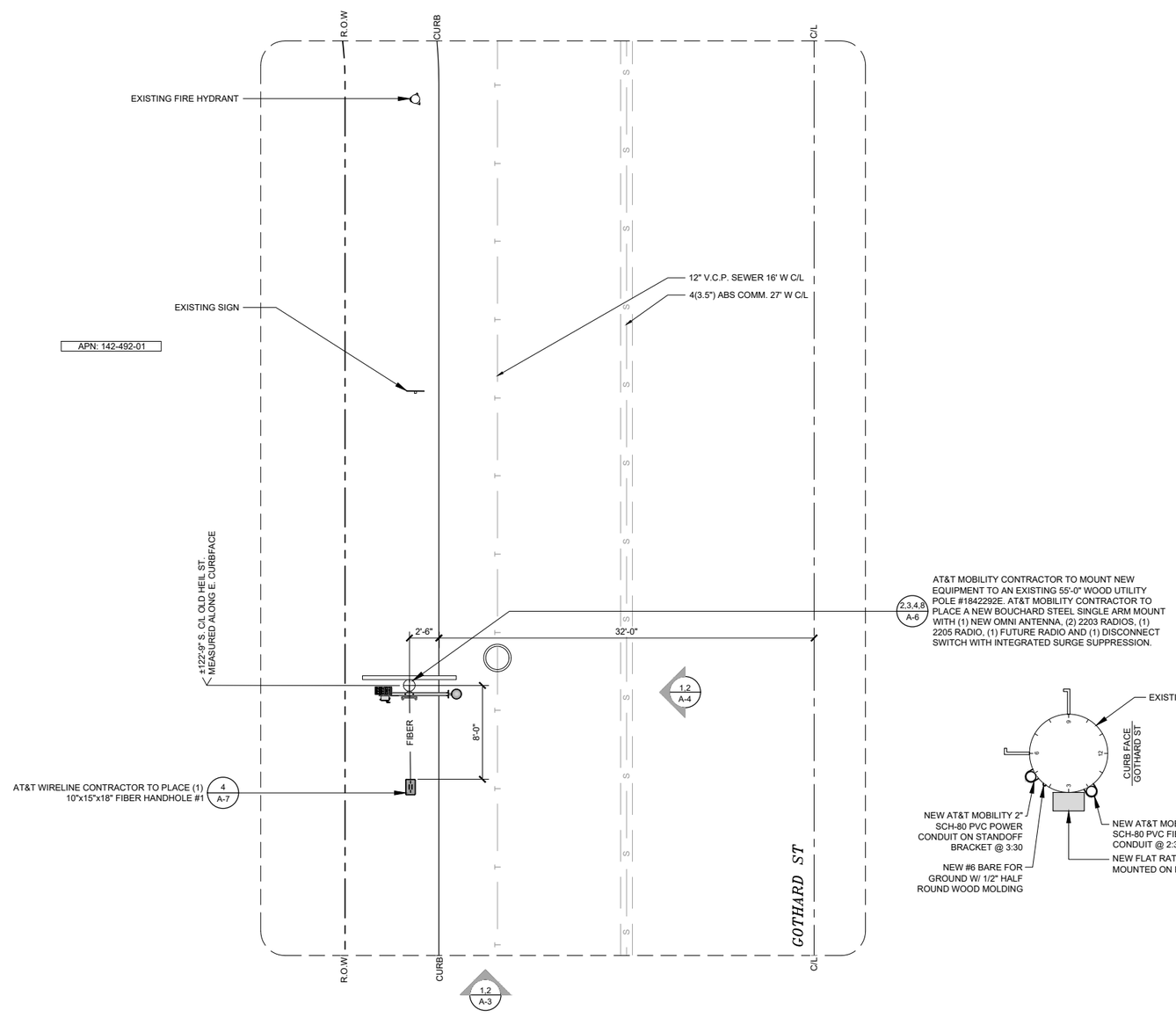

UNDERGROUND UTILITIES NOTE:

THE LOCATIONS AND EXISTENCE OF ANY UNDERGROUND PIPES, STRUCTURES OR CONDUITS SHOWN ON THIS PLAN WERE OBTAINED BY A SEARCH OF AVAILABLE RECORDS. THERE MAY BE EXISTING UTILITIES OTHER THAN THOSE SHOWN ON THIS PLAN. THE CONTRACTOR IS REQUIRED TO TAKE PRECAUTIONARY MEASURES TO PROTECT THE UTILITY LINES SHOWN AND ANY OTHER LINES NOT SHOWN ON THIS PLAN.

UTILITY LINETYPE LEGEND:

POWER		E	
PHONE		T	
WATER		W	
SEWER		S	
STORM DRAWN		SD	
GAS		G	
GASOLINE		GS	
OIL			

811 Know what's below. Call before you dig.

TO OBTAIN LOCATION OF PARTICIPANTS UNDERGROUND FACILITIES BEFORE YOU DIG IN CALIFORNIA (SOUTH), CALL DIG ALERT
TOLL FREE: 1-800-227-2600 OR
www.digalert.org
CALIFORNIA STATUTE REQUIRES MIN OF 2 WORKING DAYS NOTICE BEFORE YOU EXCAVATE

CITY PERMIT INFORMATION

HDD / OPEN TRENCH A/C STREET FOOTAGE:	0
HDD / OPEN TRENCH CONC. PARKWAY FOOTAGE:	8'-0"
HDD / OPEN TRENCH GRASS/DIRT PARKWAY FOOTAGE:	0
HDD / OPEN TRENCH TOTAL PROJECT FOOTAGE:	8'-0"

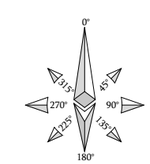

SCALE 3/16"=1'-0"

4' 0 2' 4' 8' 16'

1

ENLARGED SITE PLAN

APPLICANT:

AT&T
1452 EDINGER AVE.
TUSTIN, CA 92780

ENGINEER:

Eukon
an SFC Communications, Inc. Company
65 POST, SUITE 1000
IRVINE, CA 92618
TEL: (949) 553-8566
www.eukongroup.com

CHECKED BY A&E:	RB
CHECKED BY OSP:	RB

REVISIONS:

REV	DATE	DESCRIPTION	BY
1	01/04/19	100% CONSTRUCTION DWG	SM
A	11/12/18	90% CONSTRUCTION DWG	AE

LICENSER:

PROJECT INFORMATION:

HTBC2 - 06A

16541 GOTHARD ST
HUNTINGTON BEACH, CA 92647

SHEET TITLE:

ENLARGED SITE PLAN

SHEET NUMBER:

A-2

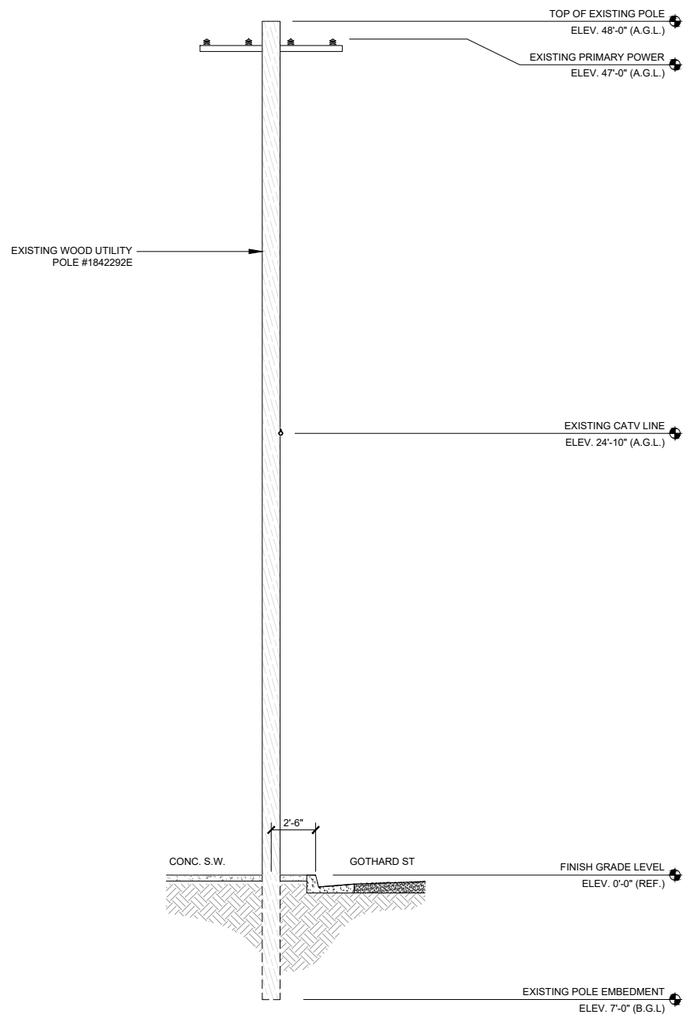

EXISTING SOUTH ELEVATION

SCALE 1/4"=1'-0"

4' 0 2' 4' 8' 16'

1

NOTES:

1. ALL CONDUCTORS/WIRES AND CONDUIT, SHALL BE INSTALLED IN A NEAT AND TIDY FASHION. ALL EXCESS WIRE SLACK TO BE REMOVED AND HIDDEN AS MUCH AS POSSIBLE.
2. ALL NEWLY INSTALLED EQUIPMENT SHALL BE PAINTED TO MATCH EXISTING POLE AND OR SURROUNDINGS UNLESS PROHIBITED PER MANUFACTURER REQUIREMENTS.

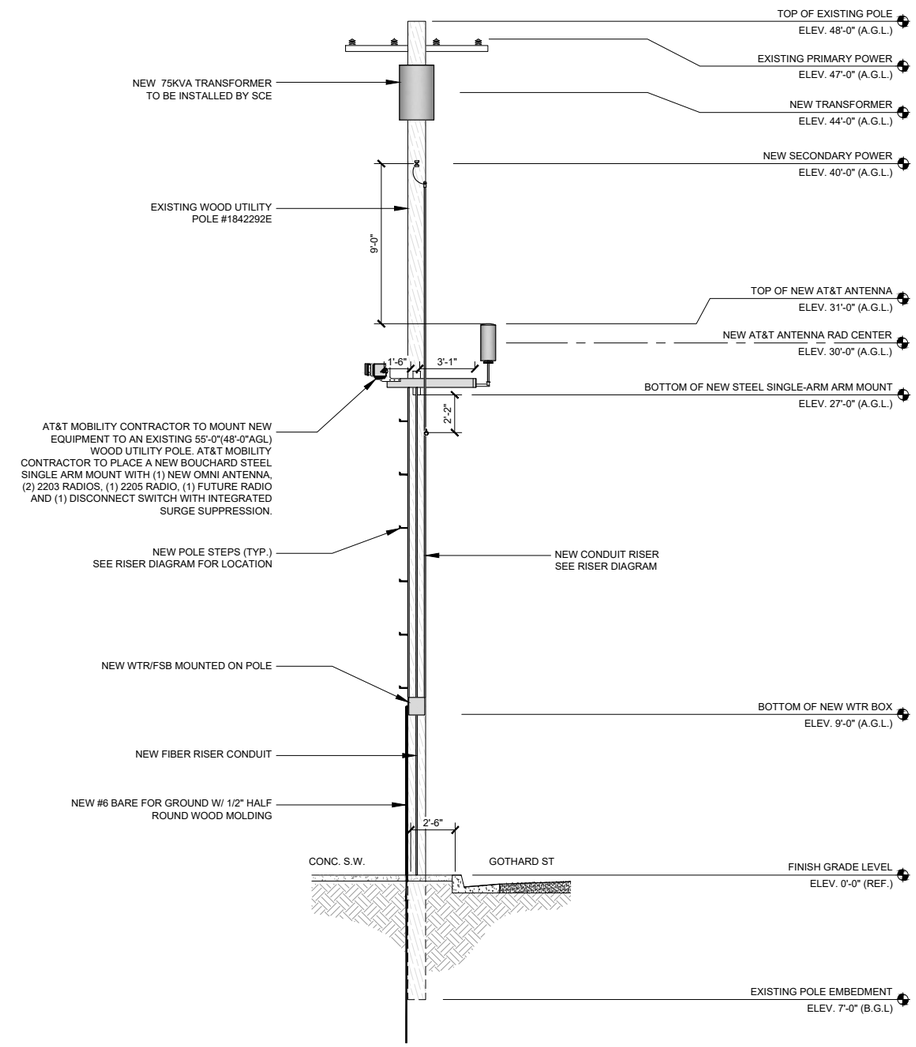

NEW SOUTH ELEVATION

SCALE 1/4"=1'-0"

4' 0 2' 4' 8' 16'

2

APPLICANT:

AT&T

1452 EDINGER AVE.
TUSTIN, CA 92780

ENGINEER:

Eukon
an SFC Communications, Inc. Company
65 POST, SUITE 1000
IRVINE, CA 92618
TEL: (949) 553-8566
www.eukongroup.com

CHECKED BY A&E:	RB
CHECKED BY OSP:	RB

REVISIONS:

REV	DATE	DESCRIPTION	BY
1	01/04/19	100% CONSTRUCTION DWG	SM
A	11/12/18	90% CONSTRUCTION DWG	AE

LICENSER:

PROJECT INFORMATION:

HTBC2 - 06A

16541 GOTHARD ST
HUNTINGTON BEACH, CA 92647

SHEET TITLE:

NEW AND EXISTING SOUTH ELEVATIONS

SHEET NUMBER:

A-3

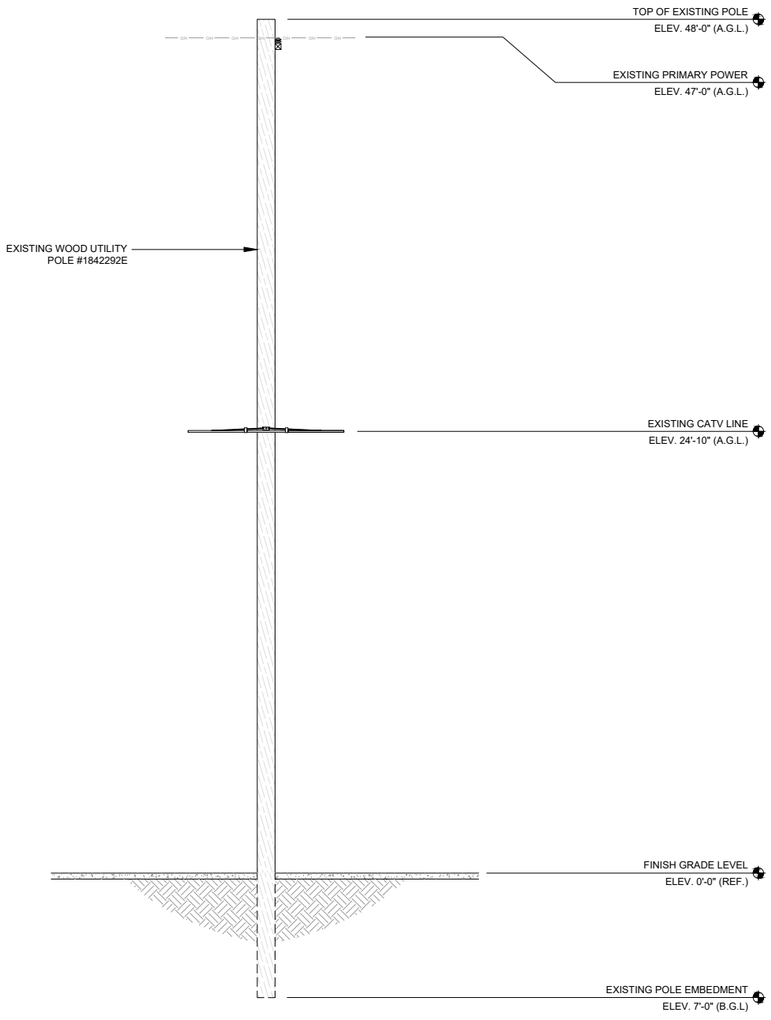

EXISTING EAST ELEVATION

SCALE 1/4"=1'-0"

1

NOTES:

1. ALL CONDUCTORS/WIRES AND CONDUIT, SHALL BE INSTALLED IN A NEAT AND TIDY FASHION. ALL EXCESS WIRE SLACK TO BE REMOVED AND HIDDEN AS MUCH AS POSSIBLE.
2. ALL NEWLY INSTALLED EQUIPMENT SHALL BE PAINTED TO MATCH EXISTING POLE AND OR SURROUNDINGS UNLESS PROHIBITED PER MANUFACTURER REQUIREMENTS.

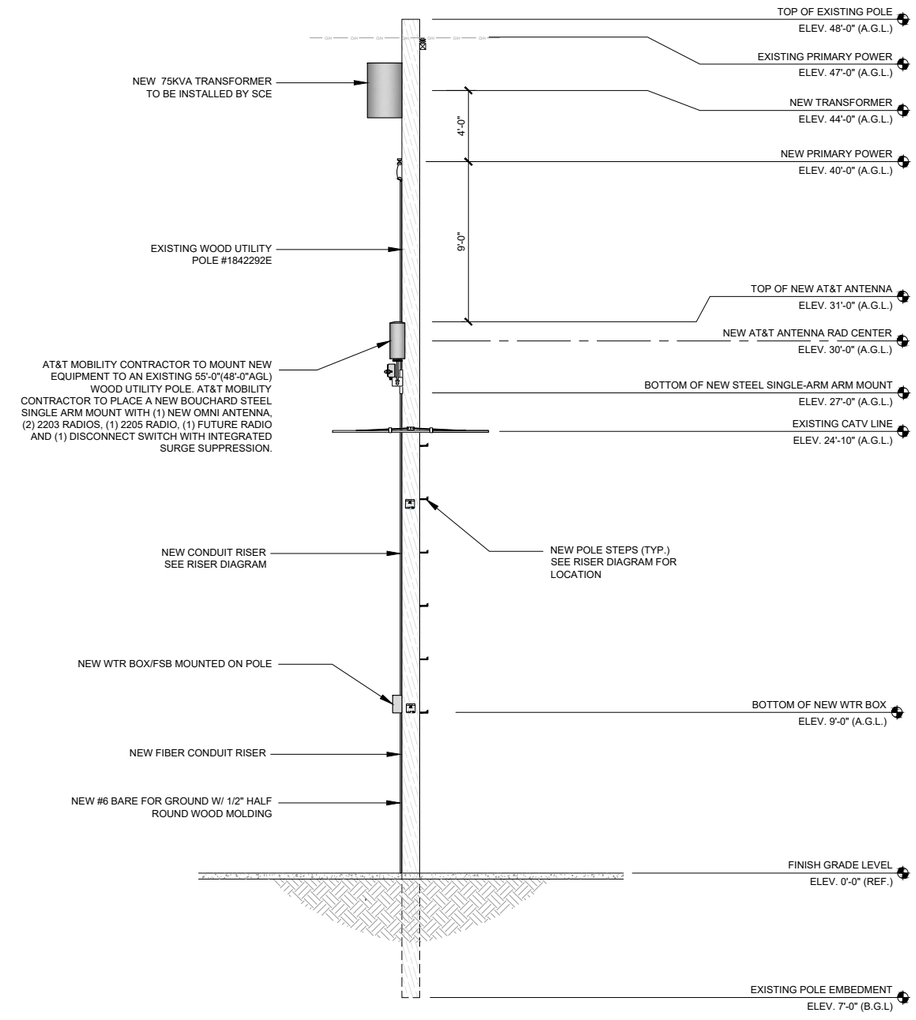

NEW EAST ELEVATION

SCALE 1/4"=1'-0"

2

APPLICANT:

AT&T

1452 EDINGER AVE.
TUSTIN, CA 92780

ENGINEER:

Eukon
an SFC Communications, Inc. Company
65 POST, SUITE 1000
IRVINE, CA 92618
TEL: (949) 553-8566
www.eukongroup.com

CHECKED BY A&E:	RB
CHECKED BY OSP:	RB

REVISIONS:

REV	DATE	DESCRIPTION	BY
1	01/04/19	100% CONSTRUCTION DWG	SM
A	11/12/18	90% CONSTRUCTION DWG	AE

LICENSER:

PROJECT INFORMATION:

HTBC2 - 06A

16541 GOTHARD ST
HUNTINGTON BEACH, CA 92647

SHEET TITLE:

NEW AND EXISTING EAST ELEVATIONS

SHEET NUMBER:

A-4

NEW SITE LOCATION SOUTHEAST VIEW

SCALE	
NONE	1

APPLICANT:

AT&T

1452 EDINGER AVE.
TUSTIN, CA 92780

ENGINEER:

Eukon
an SFC Communications, Inc. Company
65 POST, SUITE 1000
IRVINE, CA 92618
TEL: (949) 553-8566
www.eukongroup.com

CHECKED BY A&E:	RB
CHECKED BY OSP:	RB

REVISIONS:

REV	DATE	DESCRIPTION	BY
1	01/04/19	100% CONSTRUCTION DWG	SM
A	11/12/18	90% CONSTRUCTION DWG	AE

LICENSER:

PROJECT INFORMATION:

HTBC2 - 06A

16541 GOTHARD ST
HUNTINGTON BEACH, CA 92647

SHEET TITLE:

SITE IMAGE

SHEET NUMBER:

A-5

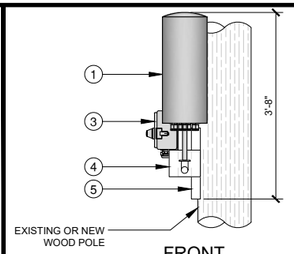

FRONT

KEY:

1. (1) NEW GALTRONICS OMNI ANTENNA.
2. (2) NEW RADIO 2203, (1) NEW RADIO 2205 AND (1) FUTURE RADIO.
3. (1) NEW DISCONNECT WITH INTEGRATED SURGE SUPPRESSION.
4. (1) NEW BOUCHARD SINGLE-ARM STEEL MOUNT ASSEMBLY #5401.
5. C-CHANNEL MOUNTING BRACKET (PART OF ASSEMBLY).
6. 1/4" BACK PLATE FOR EQUIPMENT MOUNTING

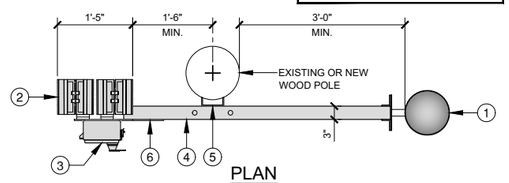

PLAN

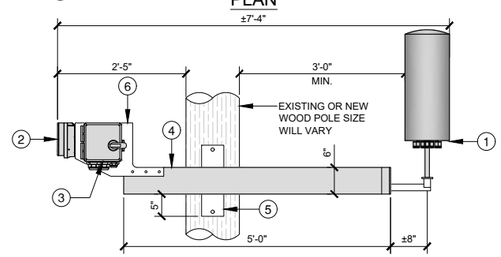

SIDE

BOUCHARD SINGLE-ARM BRACKET | SCALE NONE | 2

RAYCAP - RSCAC-6533-P-120-D

MECHANICAL

CONNECTION TERMINAL (POWER):	COMPRESSION LUG #6 - #14 AWG (13 - 2MM2) TERMINAL BLOCK #10-#26 AWG (6 - 0.14MM2)
ENVIRONMENTAL INGRESS PROTECTION (IP) RATING:	NEMA 4X
OPERATION TEMPERATURE:	(°C) -40° C TO +80° C
STORAGE TEMPERATURE:	(°C) -70° C TO +80° C
ENCLOSURE TYPE (OUTDOOR) POLYCARBONATE:	UL 94V-0 RATED
ENCLOSURE DIMENSION:	(L × W × H) 8.58" X 5.06" X 10.08" [217 × 128 × 256 MM]
WEIGHT:	2.25 LBS [1.02KG]

ELECTRICAL

SURGE PROTECTION DEVICE (SPD) TYPE TO UL:	STRIKESORB 30-A
NUMBER OF CIRCUITS PROTECTED:	4
SURGE PROTECTIVE DEVICE (SPD) TYPE PER UL 1449 4TH EDITION:	TYPE 2 COMPONENT ASSEMBLY
SURGE PROTECTION DEVICE (SPD) CLASS TO IEC 61643-11:	CLASS II
NOMINAL OPERATING VOLTAGE [UN]:	120 V
NOMINAL DISCHARGE CURRENT [IN] PER UL 1449 4TH EDITION:	20 KA 8/20 MS
MAXIMUM DISCHARGE CURRENT [IMAX] PER IEC 61643-11:	60 KA 8/20 MS
MAXIMUM CONTINUOUS OPERATING VOLTAGE [UC] (MCOV):	150V
VOLTAGE PROTECTION LEVEL [UP] PER IEC 61643-11:	700V
VOLTAGE PROTECTION RATING (VPR):	20 KA 8/20
SUPPRESSION TECHNOLOGY:	MOV
PROTECTION MODES (DUAL MODE):	LINE TO NEUTRAL, NEUTRAL TO GROUND

STRIKESORB MODULES ARE COMPLIANT TO THE FOLLOWING SURGE PROTECTIVE DEVICE (SPD) STANDARDS:
UL 1449 4TH EDITION: 2011, IEC 61643-11: 2011, EN 61643-11: 2012, IEEE C62.11: 2005, IEEE C62.41: 2002, IEEE C62.45: 2002, NEMA-LS-1 CERTIFICATION UL, VDE, CE

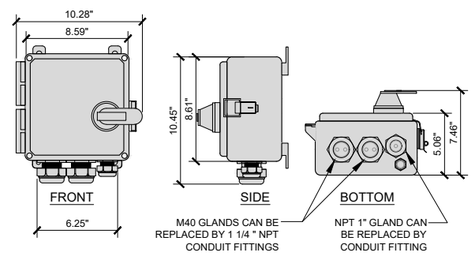

RAYCAP DISCONNECT / SUPPRESSOR | SCALE NONE | 3

GALTRONICS - GQ2410-06621
PSEUDO OMNI CANISTER ANTENNA

MECHANICAL

DIMENSIONS (HEIGHTxDIAMETER):	24.9 x 10 INCHES (634 x 255 mm)
WEIGHT EXCL MOUNTING BRACKETS:	17.2lbs (7.8 kg)
NO. OF CONNECTORS	10 X 4.3-10 DIN FEMALE
CONNECTOR TYPE & FREQUENCY BAND [MHz]:	10 X 4.3-10 DIN FEMALE 1695-23600\3550-3700\5150-5925
	4 X 4.3-10 DIN FEMALE (1695-23600) MHz
	4 X 4.3-10 DIN FEMALE (3550-3700) MHz
	2 X 4.3-10 DIN FEMALE (5150-5950) MHz
MAX WIND SPEED:	150 mph
RADOME MATERIAL:	ASA

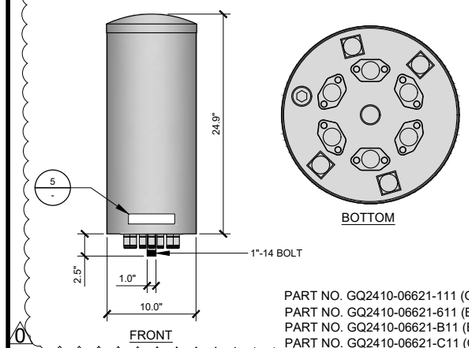

PART NO. GQ2410-06621-111 (GRAY)
PART NO. GQ2410-06621-611 (BROWN)
PART NO. GQ2410-06621-B11 (BLACK)
PART NO. GQ2410-06621-C11 (CHROME)

GALTRONICS GQ2410-06621 OMNI | SCALE NONE | 4

NOTICE

RF energy emitted by this device may exceed the FCC's general public exposure limits. Stay at least 1 foot away from the device.
Call 800-638-2822 for help if you need access within 1 foot

AVAILABLE FROM EXCEL SIGN AND DECAL:
http://www.weneedsigns.com/home.php?cal+1135 AND CLICK ON AT&T
PH: 510-651-0445
N01-DC-16 1"X6" NOTICE DECAL
"For 1 Foot Distance" VINYL DECAL WITH ADHEDSIVE BACKING

PLACE THREE NOTICE STICKER AT THE BOTTOM OF THE FRONT OF THE RADOME OF EACH ANTENNA.

GENERAL CONTRACTOR TO REVIEW AND ADHERE TO THE APPENDIX OF THE COMPLIANCE DOCUMENTATION FOR EACH SITE

OMNI ANTENNA DISCLAIMER LABEL | SCALE NONE | 5

NOTES:

1. AFFIX REQUIRED SIGNAGE AT TWO LOCATIONS ON THE SUPPORT STRUCTURE SO THEY ARE CLEARLY VISIBLE

   INSTALL 3-4 FEET BELOW ANTENNA
   (MEASURED FROM TOP OF SIGN)

   INSTALL 9-10 FEET ABOVE THE GROUND
   (MEASURED FROM BOTTOM OF SIGN)

2. SIGNS OR DECALS SHALL BE MADE OF WEATHER, CORROSION AND ULTRAVIOLET (UV) RESISTANT MATERIALS. AT A MINIMUM, EACH SIGN OR DEAL SHALL INDICATE THE; ANTENNA OWNER/ OPERATORS NAME, EMERGENCY 24-HOUR CONTACT NUMBER, UNIQUE IDENTIFIER FOR THE ANTENNA SITE, AND SCE EQUIPMENT CATALOG NUMBER FOR POLE TOP INSTALLATIONS (WHEN INSTALLING ON SCE POLES)

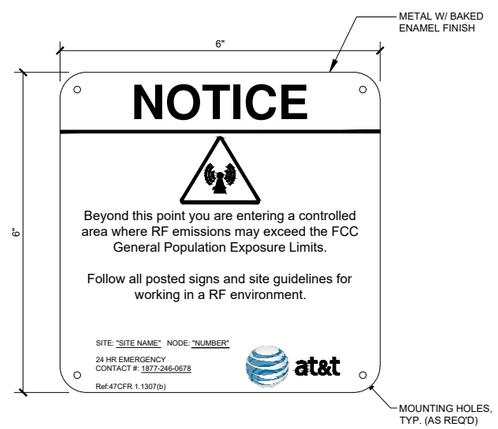

1. SIGN "A" IS TO BE MADE ON 32 MIL ALUMINUM SHEETING.
2. SIZE SHALL BE 6" BY 6" WITH 3/16" MOUNTING HOLES IN EACH CORNER OF THE SIGN FOR OPTIONAL MOUNTING.
3. SIGN SHALL COMPLY WITH ANSI C95.2 COLOR, SYMBOL, AND CONTENT CONVENTIONS.

RF NOTICE SIGNAGE | SCALE NONE | 7

ERICSSON - RADIO 2203 / 2205

MECHANICAL SPECIFICATIONS

DIMENSIONS (WxDxH):	7.87"x7.87"x3.94",INCLUDING MOUNTING BRACKET AND ESTHETIC FRONT COVER
VOLUME AND WEIGHT:	4 LITRES AND < 4.5 kg (9.92 lbs)
MOUNTING:	WALL AND POLE MOUNT

INTERFACE SPECIFICATIONS:

ANTENNA PORTS:	2 x 4.3-10(F)
CPRI:	2 x 2.5/5/10 Gbps (EXCHANGEABLE SFP MODULES)
OPTICAL INDICATORS:	6
EXTERNAL ALARM:	2
FIELD GROUND:	1

ISO

ELECTRICAL SPECIFICATIONS:

POWER SUPPLY:	-48 VCD OR 100 -250 VAC
POWER OUTPUT:	97 WATTS MAX
MAX HEAT DISSIPATION:	90 WATTS
MINIMUM AC FUSE RATING:	6 AMP

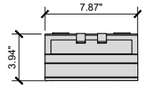

TOP

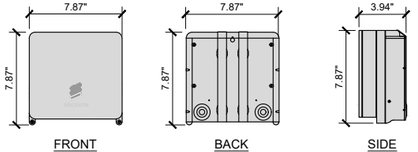

FRONT BACK SIDE

RADIO 2203 / 2205 | SCALE NONE | 8

NOT USED | SCALE NONE | 1

NOT USED | SCALE NONE | 6

APPLICANT:

AT&T
1452 EDINGER AVE.
TUSTIN, CA 92780

ENGINEER:

Eukon
an SFC Communications, Inc. Company
65 POST, SUITE 1000
IRVINE, CA 92618
TEL: (949) 553-8566
www.eukongroup.com

CHECKED BY A&E:	RB
CHECKED BY OSP:	RB

REVISIONS:

REV	DATE	DESCRIPTION	BY
0	01/04/19	100% CONSTRUCTION DWG	SM
A	11/12/18	90% CONSTRUCTION DWG	AE

LICENSER:

PROJECT INFORMATION:

HTBC2 - 06A

16541 GOTHARD ST
HUNTINGTON BEACH, CA 92647

SHEET TITLE:

EQUIPMENT DETAILS

SHEET NUMBER:

A-6

ARMORCAST - POLYMER CONCRETE 10" x 15" x 18" PULL BOX ASSEMBLY

MECHANICAL SPECIFICATIONS

DIMENSIONS (WxLxD):	10"x15"x18"
APPROX. WEIGHT: (BOX & COVER)	78 LBS.
LOAD RATING:	20K
ANSI TIER:	15/22

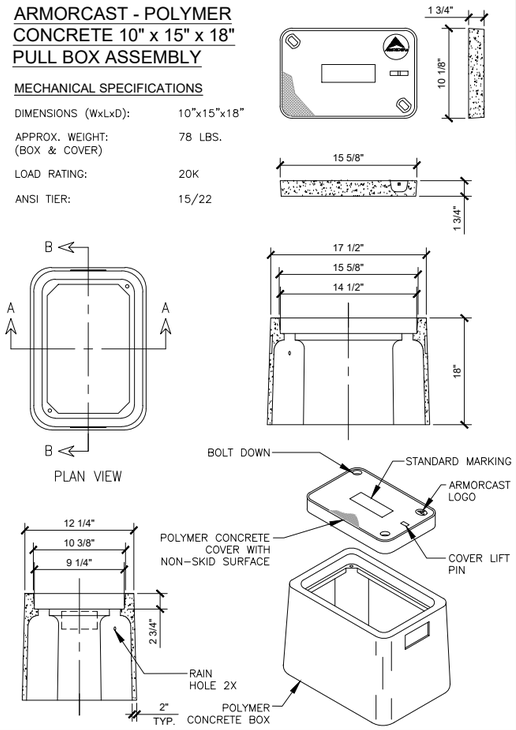

HANDHOLE SPECIFICATIONS — SCALE NONE — 1

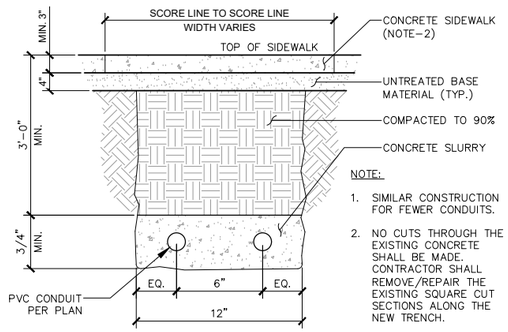

NOTE:

1. SIMILAR CONSTRUCTION FOR FEWER CONDUITS.
2. NO CUTS THROUGH THE EXISTING CONCRETE SHALL BE MADE. CONTRACTOR SHALL REMOVE/REPAIR THE EXISTING SQUARE CUT SECTIONS ALONG THE NEW TRENCH.

TRENCH DETAIL — SCALE NONE — 2

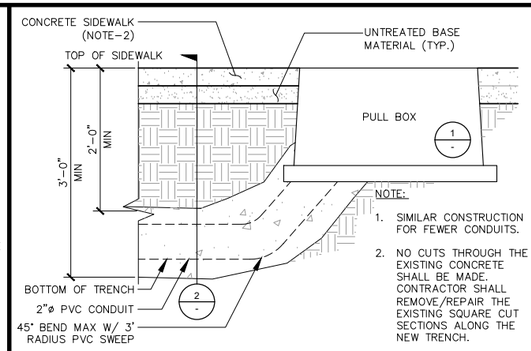

NOTE:

1. SIMILAR CONSTRUCTION FOR FEWER CONDUITS.
2. NO CUTS THROUGH THE EXISTING CONCRETE SHALL BE MADE. CONTRACTOR SHALL REMOVE/REPAIR THE EXISTING SQUARE CUT SECTIONS ALONG THE NEW TRENCH.

TRENCH DETAIL — SCALE NONE — 3

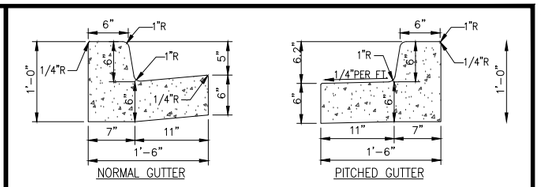

NOTES:

1. CURB & GUTTER TO BE CONSTRUCTED IN 10 FOOT LENGTHS.
2. 1/2" EXPANSION JOINTS SHALL BE PROVIDED AT INTERVALS NOT TO EXCEED 50 FEET, AT ENDS & MID POINT OF RETURNS, AND AT ANY POINT WHERE THE NEW CURB & GUTTER ABUTS OTHER CONC. STRUCTURES.
3. 5' LONG TRANSITIONS SHALL BE PROVIDED BETWEEN NORMAL GUTTER & PITCHED GUTTER, UNLESS OTHERWISE NOTED ON PLANS.
4. PITCHED GUTTER SHALL BE USED AT ALL LOCATIONS WHERE BITUMINOUS PAVEMENT SLOPES AWAY FROM THE GUTTER.

CONCRETE CURB AND GUTTER — SCALE NONE — 4

NOT USED — SCALE NONE — 5

SCALE NONE — 6

SCALE NONE — 7

NOT USED — SCALE NONE — 8

NOT USED — SCALE NONE — 9

SCALE NONE — 10

SCALE NONE — 11

APPLICANT:

AT&T

1452 EDINGER AVE.
TUSTIN, CA 92780

ENGINEER:

Eukon
an SFC Communications, Inc. Company
65 POST, SUITE 1000
IRVINE, CA 92618
TEL: (949) 553-8566
www.eukongroup.com

CHECKED BY A&E:	RB
CHECKED BY OSP:	RB

REVISIONS:

REV	DATE	DESCRIPTION	BY
1	01/04/19	100% CONSTRUCTION DWG	SM
A	11/12/18	90% CONSTRUCTION DWG	AE

LICENSER:

PROJECT INFORMATION:

HTBC2 - 06A

16541 GOTHARD ST
HUNTINGTON BEACH, CA 92647

SHEET TITLE:

CONSTRUCTION DETAILS

SHEET NUMBER:

A-7

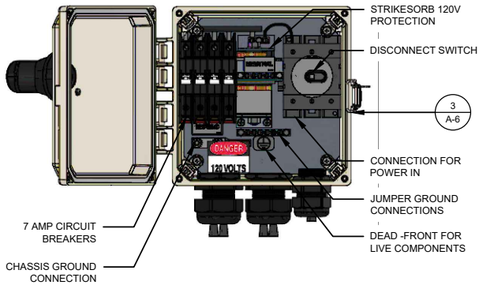

BREAKER SCHEDULE

SCALE NONE | 1

1. **GROUND BONDS**: ALL BONDS ARE TO BE MADE WITH #6 AWG STRANDED COPPER IN GREEN INSULATION. (ATT-TP-76416 7, 6.7)
2. **EXTERIOR UNIT BONDS**: ALL METALLIC OBJECTS SHALL BE BONDED TO THE GROUND ROD. (ATT-TP-76416 7, 12.6)
3. CONTRACTOR TO SURROUND COMPLETED CONNECTIONS WITH WEATHERPROOFING TAPE OR EQUAL TO.

GROUNDING NOTES

SCALE NONE | 2

NOTE:
ALL GROUND CONDUCTORS TO BE #6 THHN/THWN GREEN STRANDED COPPER UNLESS OTHERWISE NOTED OR REQUIRED BY EQUIPMENT MANUFACTURER. MECHANICAL CONNECTIONS ARE TO BE IRREVERSIBLE CRIMP OR EQUIVALENT.

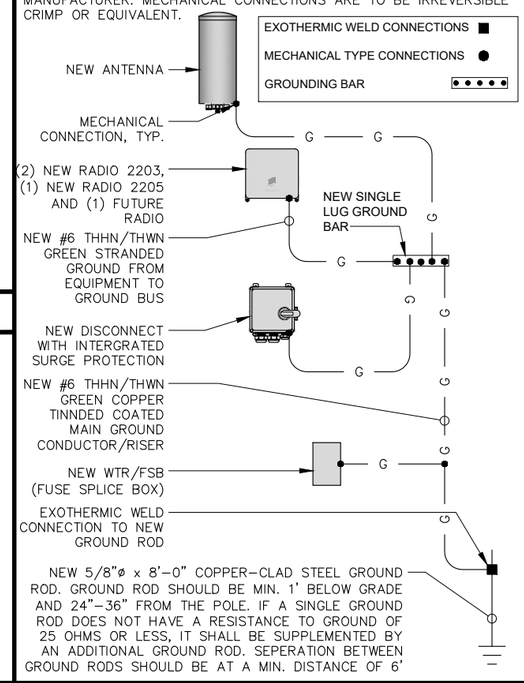

GROUNDING SCHEMATIC

SCALE NONE | 5

NOTE:
UTILITY DESIGN AND RUNS ARE PRELIMINARY. PENDING FINAL DESIGN FROM UTILITY PROVIDERS.

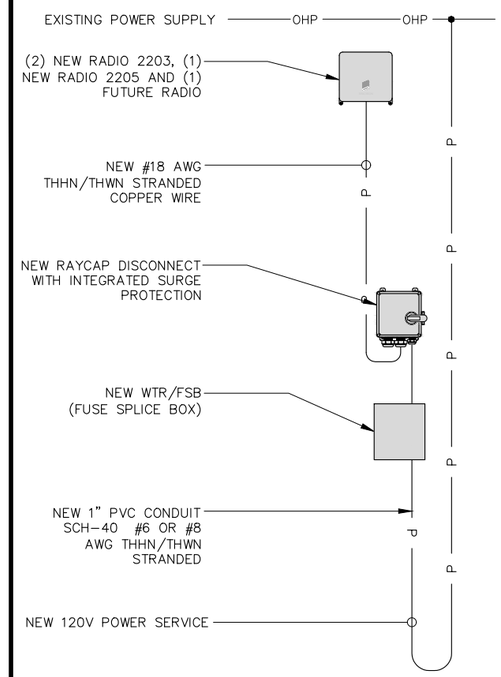

ONE-LINE DIAGRAM

SCALE NONE | 6

FUSE SPLICE BOX

DIMENSIONS: (HxLxW)
12" x 14" x 6"

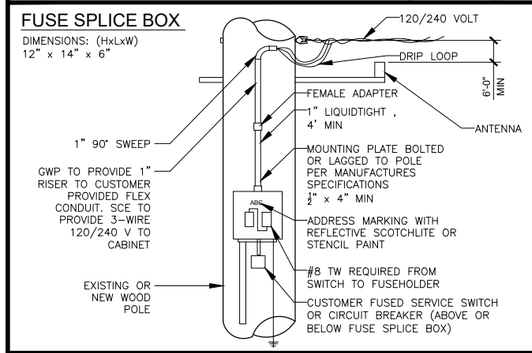

WTR/FSB ON POLE - ELEVATION

SCALE NONE | 3

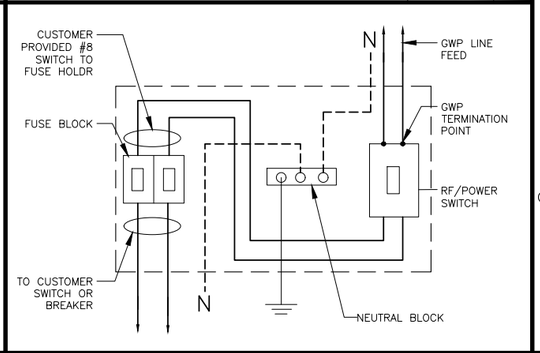

FSB WIRING DIAGRAM

SCALE NONE | 4

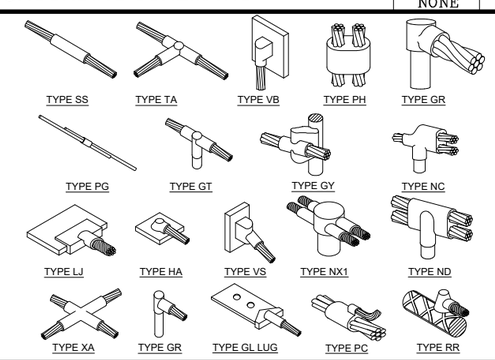

EXOTHERMIC CONNECTIONS

SCALE NONE | 9

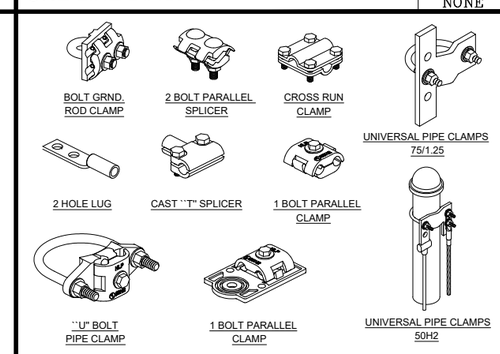

MECHANICAL CONNECTIONS

SCALE NONE | 10

NOT USED

SCALE NONE | 7

NOT USED

SCALE NONE | 8

NOT USED

SCALE NONE | 11

NOT USED

SCALE NONE | 12

NOT USED

SCALE NONE | 13

NOT USED

SCALE NONE | 14

APPLICANT:

AT&T
1452 EDINGER AVE.
TUSTIN, CA 92780

ENGINEER:

Eukon
an SFC Communications, Inc. Company
65 POST, SUITE 1000
IRVINE, CA 92618
TEL: (949) 553-8566
www.eukongroup.com

CHECKED BY A&E:	RB
CHECKED BY OSP:	RB

REVISIONS:

REV	DATE	DESCRIPTION	BY
1	01/04/19	100% CONSTRUCTION DWG	SM
A	11/12/18	90% CONSTRUCTION DWG	AE

LICENSER:

PROJECT INFORMATION:

HTBC2 - 06A

16541 GOTHARD ST
HUNTINGTON BEACH, CA 92647

SHEET TITLE:

ELECTRICAL AND GROUNDING DETAILS

SHEET NUMBER:

E-1